ANNEXES TO THE NATIONAL INVENTORY REPORT

ANNEX 1: KEY CATEGORIES

ANNEX 2: DETAILED DISCUSSION OF METHODOLOGY AND DATA FOR ESTIMATING CO_2 EMISSIONS FROM FOSSIL FUEL COMBUSTION

ANNEX 3: OTHER DETAILED METHODOLOGICAL DESCRIPTIONS FOR INDIVIDUAL SOURCE OR SINK CATEGORIES, INCLUDING FOR KP-LULUCF ACTIVITIES

ANNEX 4: CO_2 REFERENCE APPROACH AND COMPARISON WITH SECTORAL APPROACH, LATVIA'S ENERGY BALANCE

ANNEX 5: ASSESSMENT OF COMPLETENESS AND (POTENTIAL) SOURCES AND SINK OF GHG EMISSIONS AND REMOVALS EXCLUDED FOR THE ANNUAL INVENTORY SUBMISSION

ANNEX 6: THE ANNUAL INVENTORY SUBMISSION AND THE SUPPLEMENTARY INFORMATION REQUIRED UNDER ARTICLE 7, PARAGRAPH 1, OF THE KYOTO PROTOCOL OR OTHER USEFUL REFERENCE INFORMATION

ANNEX 7: TABLES 6.1 AND 6.2 OF THE IPCC GOOD PRACTICE GUIDANCE

ANNEX 8: OTHER

ANNEX 1: KEY CATEGORIES

Level assessment year 2011 without LULUCF

IPCC GHG Source and Sink Categories	Gas	1990 Estimate, Gg CO2-eq	2011 Estimate, Gg CO2-eq	2011 absolute values	% Level Assessment for 2011	% Cumulative Total of Level Assessment	Activity data uncertainty	Emission factor uncertainty	Combined uncertainty	Combined uncertainty as % of total national emissions in year t	Type A sensitivity	Type B sensitivity	Uncertainty in trend in national emissions introduced by emission factor uncertainty	Uncertainty in trend in national emissions introduced by activity data uncertainty	Uncertainty introduced into the trend in total national emissions
1.A.3.b Road Transportation - Diesel Oil	CO_2	616.136	1,993.449	1,993.449	17.343%	17.343%	2.00%	2.00%	2.83%	0.49%	6.55%	7.57%	0.13%	0.21%	0.25%
1.A.1.a Public Electricity and Heat Production - Gaseous Fuels	CO_2	2,644.313	1,914.395	1,914.395	16.655%	33.998%	2.00%	5.00%	5.39%	0.90%	2.88%	7.27%	0.14%	0.21%	0.25%
4.D.1. Direct Soil Emissions	N_2O	1,618.317	954.865	954.865	8.307%	42.306%	40.00%	25.00%	47.17%	3.92%	0.94%	3.63%	0.24%	2.05%	2.07%
1.A.3.b Road Transportation - Gasoline	CO_2	1,689.330	763.653	763.653	6.644%	48.950%	2.00%	2.00%	2.83%	0.19%	0.10%	2.90%	0.00%	0.08%	0.08%
4.A. Enteric Fermentation	CH_4	2,148.053	674.119	674.119	5.865%	54.814%	2.00%	20.00%	20.10%	1.18%	-1.00%	2.56%	-0.20%	0.07%	0.21%
2.A.1 Cement Production	CO_2	366.123	558.657	558.657	4.860%	59.675%	10.00%	5.00%	11.18%	0.54%	1.51%	2.12%	0.08%	0.30%	0.31%
4.D.3.Indirect Emissions	N_2O	1,033.873	388.649	388.649	3.381%	63.056%	30.00%	40.00%	50.00%	1.69%	-0.24%	1.48%	-0.10%	0.63%	0.63%
1.A.4.c Agriculture/Forestry/Fisheries - Liquid Fuels	CO_2	694.469	349.456	349.456	3.040%	66.096%	2.00%	10.00%	10.20%	0.31%	0.18%	1.33%	0.02%	0.04%	0.04%
5.A.2. Unmanaged Waste Disposal Sites	CH_4	329.978	321.613	321.613	2.798%	68.894%	20.00%	52.00%	55.71%	1.56%	0.67%	1.22%	0.35%	0.35%	0.49%
1.A.4.a Commercial/Institutional - Gaseous Fuels	CO_2	337.481	275.377	275.377	2.396%	71.290%	2.00%	5.00%	5.39%	0.13%	0.49%	1.05%	0.02%	0.03%	0.04%
1.A.4.b Residential - Gaseous Fuels	CO_2	219.607	247.446	247.446	2.153%	73.443%	50.00%	5.00%	50.25%	1.08%	0.58%	0.94%	0.03%	0.66%	0.67%
1.A.3.c Railways - Liquid Fuels	CO_2	531.380	232.656	232.656	2.024%	75.467%	2.00%	5.00%	5.39%	0.11%	0.00%	0.88%	0.00%	0.02%	0.02%
1.A.2.f Other - Gaseous Fuels	CO_2	835.236	211.151	211.151	1.837%	77.304%	2.00%	5.00%	5.39%	0.10%	-0.58%	0.80%	-0.03%	0.02%	0.04%
1.A.2.f Other - Solid Fuels	CO_2	38.236	200.640	200.640	1.746%	79.050%	2.00%	15.00%	15.13%	0.26%	0.70%	0.76%	0.10%	0.02%	0.11%
1.A.4.b Residential - Biomass	CH_4	126.063	164.707	164.707	1.433%	80.483%	50.00%	50.00%	70.71%	1.01%	0.42%	0.63%	0.21%	0.44%	0.49%
1.A.4.b Residential - Liquid Fuels	CO_2	329.914	154.254	154.254	1.342%	81.825%	50.00%	10.00%	50.99%	0.68%	0.04%	0.59%	0.00%	0.41%	0.41%
1.A.2.f Other - Liquid Fuels	CO_2	944.946	137.979	137.979	1.200%	83.025%	2.00%	10.00%	10.20%	0.12%	-1.04%	0.52%	-0.10%	0.01%	0.11%
4.B.Manure Management	N_2O	569.677	122.135	122.135	1.063%	84.088%	40.00%	30.00%	50.00%	0.53%	-0.48%	0.46%	-0.14%	0.26%	0.30%
6.A.1 Managed Waste Disposal on Land	CH_4	0.000	117.403	117.403	1.021%	85.109%	20.00%	52.00%	55.71%	0.57%	0.45%	0.45%	0.23%	0.13%	0.26%
1.A.4.a Commercial/Institutional - Solid Fuels	CO_2	1,331.987	106.459	106.459	0.926%	86.035%	2.00%	15.00%	15.13%	0.14%	-1.80%	0.40%	-0.27%	0.01%	0.27%
1.A.2.e Food Processing,	CO_2	174.195	103.409	103.409	0.900%	86.935%	2.00%	5.00%	5.39%	0.05%	0.10%	0.39%	0.01%	0.01%	0.01%

IPCC GHG Source and Sink Categories	Gas	1990 Estimate, Gg CO2-eq	2011 Estimate, Gg CO2-eq	2011 absolute values	% Level Assessment for 2011	% Cumulative Total of Level Assessment	Activity data uncertainty	Emission factor uncertainty	Combined uncertainty	Combined uncertainty as % of total national emissions in year t	Type A sensitivity	Type B sensitivity	Uncertainty in trend in national emissions introduced by emission factor uncertainty	Uncertainty in trend in national emissions introduced by activity data uncertainty	Uncertainty introduced into the trend in total national emissions
Beverages and Tobacco - Gaseous Fuels															
1.A.4.b Residential - Solid Fuels	CO_2	585.452	102.243	102.243	0.890%	87.825%	50.00%	15.00%	52.20%	0.46%	-0.58%	0.39%	-0.09%	0.27%	0.29%
1.A.4.a Commercial/Institutional - Liquid Fuels	CO_2	1,131.478	98.537	98.537	0.857%	88.682%	2.00%	10.00%	10.20%	0.09%	-1.50%	0.37%	-0.15%	0.01%	0.15%
1.B.2.b Natural Gas	CH_4	285.422	89.815	89.815	0.781%	89.463%	2.00%	2.00%	2.83%	0.02%	-0.13%	0.34%	0.00%	0.01%	0.01%
4.B.Manure Management	CH_4	273.758	88.780	88.780	0.772%	90.236%	2.00%	30.00%	30.07%	0.23%	-0.12%	0.34%	-0.04%	0.01%	0.04%
4.D.2 Pasture, Range and Paddock Manure	N_2O	358.351	86.977	86.977	0.757%	90.992%	40.00%	25.00%	47.17%	0.36%	-0.26%	0.33%	-0.07%	0.19%	0.20%
2.F(a).1 Refrigeration and Air Conditioning Equipment	HFCs	0.000	74.275	74.275	0.646%	91.638%	75.00%	75.00%	106.07%	0.69%	0.28%	0.28%	0.21%	0.30%	0.37%
1.A.3.b Road Transportation - LPG	CO_2	36.957	73.934	73.934	0.643%	92.282%	2.00%	5.00%	5.39%	0.03%	0.22%	0.28%	0.01%	0.01%	0.01%
1.A.2.f Other - Other Fuels	CO_2	0.000	66.676	66.676	0.580%	92.862%	2.00%	5.00%	5.39%	0.03%	0.25%	0.25%	0.01%	0.01%	0.01%
1.A.2.a Iron and Steel - Gaseous Fuels	CO_2	234.464	65.123	65.123	0.567%	93.428%	2.00%	5.00%	5.39%	0.03%	-0.14%	0.25%	-0.01%	0.01%	0.01%
2.A.6 Road Paving with Asphalt	CO_2	1.463	62.534	62.534	0.544%	93.972%	20.00%	70.00%	72.80%	0.40%	0.24%	0.24%	0.16%	0.07%	0.18%
1.A.1.c Manufacture of Solid Fuels and Other Energy Industries - Gaseous Fuels	CO_2	44.672	52.078	52.078	0.453%	94.425%	2.00%	5.00%	5.39%	0.02%	0.12%	0.20%	0.01%	0.01%	0.01%
6.B.2 Domestic and Commercial Waste Water	N_2O	63.528	49.400	49.400	0.430%	94.855%	10.00%	30.00%	31.62%	0.14%	0.08%	0.19%	0.02%	0.03%	0.04%
6.B.2 Domestic and Commercial Waste Water	CH_4	97.860	48.980	48.980	0.426%	95.281%	10.00%	30.00%	31.62%	0.13%	0.02%	0.19%	0.01%	0.03%	0.03%

Level assessment year 2011 with LULUCF

IPCC GHG Source and Sink Categories	Gas	1990 Estimate, Gg CO2-eq	2011 Estimate, Gg CO2-eq	2011 absolute values	% Level Assessment for 2011	% Cumulative Total of Level Assessment	Activity data uncertainty	Emission factor uncertainty	Combined uncertainty	Combined uncertainty as % of total national emissions in year t	Type A sensitivity	Type B sensitivity	Uncertainty in trend in national emissions introduced by emission factor uncertainty	Uncertainty in trend in national emissions introduced by activity data uncertainty	Uncertainty introduced into the trend in total national emissions
5.A.1 Forest Land remaining Forest Land	CO_2	-23,057.88	-15,365.57	15,365.57	48.50%	48.50%	10.08%	30.00%	31.65%	85.54%	-1267.43%	-382.48%	-3.80	-0.55	3.84
5.G Other	CO_2	-173.00	-2,434.00	2,434.00	7.68%	56.18%	10.00%	30.00%	31.62%	13.54%	-66.71%	-60.59%	-0.20	-0.09	0.22

IPCC GHG Source and Sink Categories	Gas	1990 Estimate, Gg CO2-eq	2011 Estimate, Gg CO2-eq	2011 absolute values	% Level Assessment for 2011	% Cumulative Total of Level Assessment	Activity data uncertainty	Emission factor uncertainty	Combined uncertainty	Combined uncertainty as % of total national emissions in year t	Type A sensitivity	Type B sensitivity	Uncertainty in trend in national emissions introduced by emission factor uncertainty	Uncertainty in trend in national emissions introduced by activity data uncertainty	Uncertainty introduced into the trend in total national emissions
1.A.3.b Road Transportation - Diesel Oil	CO_2	616.14	1,993.45	1,993.45	6.29%	62.47%	2.00%	2.00%	2.83%	-0.99%	71.21%	49.62%	0.01	0.01	0.02
1.A.1.a Public Electricity and Heat Production - Gaseous Fuels	CO_2	2,644.31	1,914.39	1,914.39	6.04%	68.52%	2.00%	5.00%	5.39%	-1.81%	139.88%	47.65%	0.07	0.01	0.07
4.D.1. Direct Soil Emissions	N_2O	1,618.32	954.86	954.86	3.01%	71.53%	40.00%	25.00%	47.17%	-7.92%	80.45%	23.77%	0.20	0.13	0.24
5.A.2 Land converted to Forest Land	CO_2	-11.12	-884.05	884.05	2.79%	74.32%	16.45%	30.00%	34.21%	5.32%	-22.40%	-22.01%	-0.07	-0.05	0.08
5.E.2 Land converted to Settlements	CO_2	104.59	883.03	883.03	2.79%	77.11%	19.00%	14.60%	23.96%	-3.72%	25.66%	21.98%	0.04	0.06	0.07
1.A.3.b Road Transportation - Gasoline	CO_2	1,689.33	763.65	763.65	2.41%	79.52%	2.00%	2.00%	2.83%	-0.38%	78.19%	19.01%	0.02	0.01	0.02
4.A. Enteric Fermentation	CH_4	2,148.05	674.12	674.12	2.13%	81.65%	2.00%	20.00%	20.10%	-2.38%	91.95%	16.78%	0.18	0.00	0.18
2.A.1 Cement Production	CO_2	366.12	558.66	558.66	1.76%	83.41%	10.00%	5.00%	11.18%	-1.10%	26.78%	13.91%	0.01	0.02	0.02
4.D.3.Indirect Emissions	N_2O	1,033.87	388.65	388.65	1.23%	84.64%	30.00%	40.00%	50.00%	-3.42%	45.97%	9.67%	0.18	0.04	0.19
1.A.4.c Agriculture/Forestry/Fisheries - Liquid Fuels	CO_2	694.47	349.46	349.46	1.10%	85.74%	2.00%	10.00%	10.20%	-0.63%	33.10%	8.70%	0.03	0.00	0.03
6.A.2. Unmanaged Waste Disposal Sites	CH4	329.98	321.61	321.61	1.02%	86.75%	20.00%	52.00%	55.71%	-3.15%	19.61%	8.01%	0.10	0.02	0.10
1.A.4.a Commercial/Institutional - Gaseous Fuels	CO_2	337.48	275.38	275.38	0.87%	87.62%	2.00%	5.00%	5.39%	-0.26%	18.73%	6.85%	0.01	0.00	0.01
1.A.4.b Residential - Gaseous Fuels	CO_2	219.61	247.45	247.45	0.78%	88.40%	50.00%	5.00%	50.25%	-2.19%	13.89%	6.16%	0.01	0.04	0.04
1.A.3.c Railways - Liquid Fuels	CO_2	531.38	232.66	232.66	0.73%	89.14%	2.00%	5.00%	5.39%	-0.22%	24.48%	5.79%	0.01	0.00	0.01
5.B.1 Cropland remaining Cropland	CO_2	337.59	225.52	225.52	0.71%	89.85%	11.00%	90.00%	90.67%	-3.60%	17.49%	5.61%	0.16	0.01	0.16
1.A.2.f Other - Gaseous Fuels	CO_2	835.24	211.15	211.15	0.67%	90.52%	2.00%	5.00%	5.39%	-0.20%	34.61%	5.26%	0.02	0.00	0.02
1.A.2.f Other - Solid Fuels	CO_2	38.24	200.64	200.64	0.63%	91.15%	2.00%	15.00%	15.13%	-0.53%	6.34%	4.99%	0.01	0.00	0.01
1.A.4.b Residential - Biomass	CH_4	126.06	164.71	164.71	0.52%	91.67%	50.00%	50.00%	70.71%	-2.05%	8.54%	4.10%	0.04	0.03	0.05
1.A.4.b Residential - Liquid Fuels	CO_2	329.91	154.25	154.25	0.49%	92.16%	50.00%	10.00%	50.99%	-1.38%	15.45%	3.84%	0.02	0.03	0.03
5.A.1 Forest Land remaining Forest Land	N_2O	146.37	144.34	144.34	0.46%	92.61%	14.14%	70.00%	71.41%	-1.81%	8.75%	3.59%	0.06	0.01	0.06
5.B.2 Land converted to Cropland	CO_2	265.38	143.11	143.11	0.45%	93.06%	35.00%	14.60%	37.92%	-0.95%	12.90%	3.56%	0.02	0.02	0.03

IPCC GHG Source and Sink Categories	Gas	1990 Estimate, Gg CO2-eq	2011 Estimate, Gg CO2-eq	2011 absolute values	% Level Assessment for 2011	% Cumulative Total of Level Assessment	Activity data uncertainty	Emission factor uncertainty	Combined uncertainty	Combined uncertainty as % of total national emissions in year t	Type A sensitivity	Type B sensitivity	Uncertainty in trend in national emissions introduced by emission factor uncertainty	Uncertainty in trend in national emissions introduced by activity data uncertainty	Uncertainty introduced into the trend in total national emissions
1.A.2.f Other - Liquid Fuels	CO_2	944.95	137.98	137.98	0.44%	93.50%	2.00%	10.00%	10.20%	-0.25%	36.63%	3.43%	0.04	0.00	0.04
4.B.Manure Management	N_2O	569.68	122.13	122.13	0.39%	93.88%	40.00%	30.00%	50.00%	-1.07%	23.07%	3.04%	0.07	0.02	0.07
6.A.1 Managed Waste Disposal on Land	CH_4	0.00	117.40	117.40	0.37%	94.26%	20.00%	52.00%	55.71%	-1.15%	2.92%	2.92%	0.02	0.01	0.02
1.A.4.a Commercial/Institutional - Solid Fuels	CO_2	1,331.99	106.46	106.46	0.34%	94.59%	2.00%	15.00%	15.13%	-0.28%	49.41%	2.65%	0.07	0.00	0.07
1.A.2.e Food Processing, Beverages and Tobacco - Gaseous Fuels	CO_2	174.19	103.41	103.41	0.33%	94.92%	2.00%	5.00%	5.39%	-0.10%	8.71%	2.57%	0.00	0.00	0.00
1.A.4.b Residential - Solid Fuels	CO_2	585.452	102.243	102.243	0.32%	95.24%	50.00%	15.00%	52.20%	-0.94%	23.13%	2.55%	3.47%	1.80%	3.91%

Trend assessment year 2011 without LULUCF

IPCC GHG Source and Sink Categories		1990 Estimate, Gg CO2-eq	1990, absolute values	2011 Estimate, Gg CO2-eq	2011 absolute values	% Level Assessment	Trend Assessment	*Trend Assessmen with Uncertainty*	% Contribution to trend	% Cumulative Total of Trend Assessment	Activity data uncertainty	Emission factor uncertainty	Combined uncertainty
1.A.1.a Public Electricity and Heat Production - Liquid Fuels	CO_2	3,050.347	3,050.347	46.677	46.677	0.406%	0.2561	*0.0261*	8.447%	8.4472%	2.00%	10.00%	10.20%
4.D.1. Direct Soil Emissions	N_2O	1,618.317	1,618.317	954.865	954.865	8.307%	0.0495	*0.0233*	7.546%	15.9931%	40.00%	25.00%	47.17%
6.A.2 Unmanaged Waste Disposal on Land	CH_4	329.978	329.978	321.613	321.613	2.798%	0.0354	*0.0197*	6.374%	22.3673%	20.00%	52.00%	55.71%
1.A.4.b Residential - Solid Fuels	CO_2	585.452	585.452	102.243	102.243	0.890%	0.0306	*0.0160*	5.161%	27.5279%	50.00%	15.00%	52.20%
2.F(a).1 Refrigeration and Air Conditioning Equipment	HFCs			74.275	74.275	0.646%	0.0148	*0.0157*	5.077%	32.6051%	75.00%	75.00%	106.07%
1.A.4.b Residential - Biomass	CH_4	126.063	126.063	164.707	164.707	1.433%	0.0218	*0.0154*	4.997%	37.6024%	50.00%	50.00%	70.71%
1.A.4.b Residential - Gaseous Fuels	CO_2	219.607	219.607	247.446	247.446	2.153%	0.0302	*0.0152*	4.908%	42.5104%	50.00%	5.00%	50.25%
1.A.4.a Commercial/Institutional - Solid Fuels	CO_2	1,331.987	1,331.987	106.459	106.459	0.926%	0.0947	*0.0143*	4.634%	47.1444%	2.00%	15.00%	15.13%
6.A.1 Managed Waste Disposal on Land	CH_4			117.403	117.403	1.021%	0.0234	*0.0130*	4.215%	51.3599%	20.00%	52.00%	55.71%
4.B.Manure Management	N_2O	569.677	569.677	122.135	122.135	1.063%	0.0252	*0.0126*	4.080%	55.4399%	40.00%	30.00%	50.00%
4.A. Enteric Fermentation	CH_4	2,148.053	2,148.053	674.119	674.119	5.865%	0.0526	*0.0106*	3.418%	58.8575%	2.00%	20.00%	20.10%
1.A.3.b Road Transportation - Diesel Oil	CO_2	616.136	616.136	1,993.449	1,993.449	17.343%	0.3436	*0.0097*	3.143%	62.0008%	2.00%	2.00%	2.83%
2.A.6 Road Paving with Asphalt	CO_2	1.463	1.463	62.534	62.534	0.544%	0.0123	*0.0090*	2.904%	64.9048%	20.00%	70.00%	72.80%
2.A.1 Cement Production	CO_2	366.123	366.123	558.657	558.657	4.860%	0.0795	*0.0089*	2.873%	67.7783%	10.00%	5.00%	11.18%
1.A.1.a Public Electricity and Heat	CO_2	2,644.313	2,644.313	1,914.395	1,914.395	16.655%	0.1514	*0.0082*	2.637%	70.4150%	2.00%	5.00%	5.39%

IPCC GHG Source and Sink Categories		1990 Estimate, Gg CO2-eq	1990, absolute values	2011 Estimate, Gg CO2-eq	2011 absolute values	% Level Assessment	Trend Assessment	*Trend Assessmen with Uncertainty*	% Contribution to trend	% Cumulative Total of Trend Assessment	Activity data uncertainty	Emission factor uncertainty	Combined uncertainty
Production - Gaseous Fuels													
1.A.4.a Commercial/Institutional - Liquid Fuels	CO_2	1,131.478	1,131.478	98.537	98.537	0.857%	0.0788	*0.0080*	2.600%	73.0146%	2.00%	10.00%	10.20%
4.D.2 Pasture, Range and Paddock Manure	N_2O	358.351	358.351	86.977	86.977	0.757%	0.0138	*0.0065*	2.113%	75.1273%	40.00%	25.00%	47.17%
1.A.2.e Food Processing, Beverages and Tobacco - Liquid Fuels	CO_2	798.124	798.124	33.093	33.093	0.288%	0.0628	*0.0064*	2.073%	77.2002%	2.00%	10.00%	10.20%
4.D.3.Indirect Emissions	N_2O	1,033.873	1,033.873	388.649	388.649	3.381%	0.0125	*0.0063*	2.023%	79.2237%	30.00%	40.00%	50.00%
2.A.3 Limestone and Dolomite Use	CO_2	141.005	141.005	4.940	4.940	0.043%	0.0113	*0.0056*	1.826%	81.0500%	2.00%	50.00%	50.04%
1.A.2.f Other - Liquid Fuels	CO_2	944.946	944.946	137.979	137.979	1.200%	0.0547	*0.0056*	1.805%	82.8550%	2.00%	10.00%	10.20%
1.A.2.f Other - Solid Fuels	CO_2	38.236	38.236	200.640	200.640	1.746%	0.0366	*0.0055*	1.794%	84.6489%	2.00%	15.00%	15.13%
1.A.4.b Residential - Biomass	N_2O	24.812	24.812	34.204	34.204	0.298%	0.0047	*0.0033*	1.065%	85.7139%	50.00%	50.00%	70.71%
1.A.1.a Public Electricity and Heat Production - Solid Fuels	CO_2	338.628	338.628	39.722	39.722	0.346%	0.0215	*0.0033*	1.055%	86.7685%	2.00%	15.00%	15.13%
1.A.4.c Agriculture/Forestry/Fisheries - Gaseous Fuels	CO_2	778.520	778.520	43.017	43.017	0.374%	0.0592	*0.0032*	1.031%	87.7991%	2.00%	5.00%	5.39%
3.D Other	CO_2	20.394	20.394	26.182	26.182	0.228%	0.0034	*0.0026*	0.842%	88.6415%	10.00%	75.00%	75.66%
1.A.2.c Chemicals - Liquid Fuels	CO_2	276.669	276.669	9.132	9.132	0.079%	0.0223	*0.0023*	0.734%	89.3755%	2.00%	10.00%	10.20%
4.B.Manure Management	CH_4	273.758	273.758	88.780	88.780	0.772%	0.0061	*0.0018*	0.596%	89.9715%	2.00%	30.00%	30.07%
1.A.4.b Residential - Solid Fuels	CH_4	43.019	43.019	6.963	6.963	0.061%	0.0024	*0.0017*	0.539%	90.5102%	50.00%	50.00%	70.71%
1.A.2.f Other - Gaseous Fuels	CO_2	835.236	835.236	211.151	211.151	1.837%	0.0306	*0.0016*	0.533%	91.0432%	2.00%	5.00%	5.39%
1.A.4.a Commercial/Institutional - Gaseous Fuels	CO_2	337.481	337.481	275.377	275.377	2.396%	0.0255	*0.0014*	0.444%	91.4874%	2.00%	5.00%	5.39%
6.B.2 Domestic and Commercial Waste Water	N_2O	63.528	63.528	49.400	49.400	0.430%	0.0043	*0.0014*	0.441%	91.9289%	10.00%	30.00%	31.62%
1.A.2.f Other - Biomass Fuels	N_2O	0.482	0.482	13.083	13.083	0.114%	0.0026	*0.0013*	0.433%	92.3619%	15.00%	50.00%	52.20%
1.A.4.a Commercial/Institutional - Biomass	CH_4	32.873	32.873	25.464	25.464	0.222%	0.0022	*0.0012*	0.386%	92.7475%	20.00%	50.00%	53.85%
1.A.3.b Road Transportation - Diesel Oil	N_2O	5.819	5.819	14.350	14.350	0.125%	0.0024	*0.0012*	0.381%	93.1283%	2.00%	50.00%	50.04%
1.A.4.c Agriculture/Forestry/Fisheries - Solid Fuels	CO_2	94.804	94.804	2.417	2.417	0.021%	0.0078	*0.0012*	0.380%	93.5085%	2.00%	15.00%	15.13%
1.A.2.e Food Processing, Beverages and Tobacco - Solid Fuels	CO_2	91.116	91.116	2.417	2.417	0.021%	0.0074	*0.0011*	0.364%	93.8729%	2.00%	15.00%	15.13%
2.F(a).9 Other	HFCs			5.198	5.198	0.045%	0.0010	*0.0011*	0.355%	94.2283%	75.00%	75.00%	106.07%
1.A.4.b Residential - Liquid Fuels	CO_2	329.914	329.914	154.254	154.254	1.342%	0.0020	*0.0010*	0.335%	94.5633%	50.00%	10.00%	50.99%
1.A.4.c Agriculture/Forestry/Fisheries - Liquid Fuels	CO_2	694.469	694.469	349.456	349.456	3.040%	0.0092	*0.0009*	0.304%	94.8670%	2.00%	10.00%	10.20%
1.A.5.b Mobile - Liquid Fuels	CO_2			7.200	7.200	0.063%	0.0014	*0.0007*	0.232%	95.0992%	2.00%	50.00%	50.04%

Trend assessment 2011 with LULUCF

IPCC GHG Source and Sink Categories		1990 Estimate, Gg CO2-eq	1990, absolute values	2011 Estimate, Gg CO2-eq	2011 absolute values	% Level Assessment	Trend Assessment	*Trend Assessmen with Uncertainty*	% Contribution to trend	% Cumulative Total of Trend Assessment	Activity data uncertainty	Emission factor uncertainty	Combined uncertainty
5.A.1 Forest Land remaining Forest Land	CO_2	-23,057.878	23,057.878	-15,365.566	15,365.566	48.499%	-5.9659	*-1.8880*	55.990%	55.9904%	10.08%	30.00%	31.65%
4.D.1. Direct Soil Emissions	N_2O	1,618.317	1,618.317	954.865	954.865	3.014%	-0.4034	*-0.1903*	5.642%	61.63%	40.00%	25.00%	47.17%
4.D.3.Indirect Emissions	N_2O	1,033.873	1,033.873	388.649	388.649	1.227%	-0.2302	*-0.1151*	3.413%	65.05%	30.00%	40.00%	50.00%
5.G Other	CO_2	-173.000	173.000	-2,434.000	2,434.000	7.683%	-0.3330	*-0.1053*	3.123%	########	10.00%	30.00%	31.62%
4.A. Enteric Fermentation	CH_4	2,148.053	2,148.053	674.119	674.119	2.128%	-0.4616	*-0.0928*	2.752%	70.92%	2.00%	20.00%	20.10%
5.B.1 Cropland remaining Cropland	CO_2	337.590	337.590	225.521	225.521	0.712%	-0.0874	*-0.0793*	2.350%	73.27%	11.00%	90.00%	90.67%
1.A.4.b Residential - Solid Fuels	CO_2	585.452	585.452	102.243	102.243	0.323%	-0.1157	*-0.0604*	1.791%	75.06%	50.00%	15.00%	52.20%
4.B.Manure Management	N_2O	569.677	569.677	122.135	122.135	0.385%	-0.1154	*-0.0577*	1.711%	76.77%	40.00%	30.00%	50.00%
1.A.1.a Public Electricity and Heat Production - Liquid Fuels	CO_2	3,050.347	3,050.347	46.677	46.677	0.147%	-0.5424	*-0.0553*	1.640%	78.41%	2.00%	10.00%	10.20%
6.A.2 Unmanaged Waste Disposal on Land	CH4	329.978	329.978	321.613	321.613	1.015%	-0.0980	*-0.0546*	1.620%	80.03%	20.00%	52.00%	55.71%
1.A.4.b Residential - Liquid Fuels	CO_2	329.914	329.914	154.254	154.254	0.487%	-0.0772	*-0.0394*	1.167%	81.20%	50.00%	10.00%	50.99%
5.A.2 Land converted to Forest Land	CO_2	-11.116	11.116	-884.055	884.055	2.790%	-0.1118	*-0.0383*	1.135%	82.33%	16.45%	30.00%	34.21%
1.A.1.a Public Electricity and Heat Production - Gaseous Fuels	CO_2	2,644.313	2,644.313	1,914.395	1,914.395	6.042%	-0.7031	*-0.0379*	1.123%	83.46%	2.00%	5.00%	5.39%
1.A.4.a Commercial/Institutional - Solid Fuels	CO_2	1,331.987	1,331.987	106.459	106.459	0.336%	-0.2475	*-0.0375*	1.111%	84.57%	2.00%	15.00%	15.13%
1.A.4.b Residential - Gaseous Fuels	CO_2	219.607	219.607	247.446	247.446	0.781%	-0.0694	*-0.0349*	1.034%	85.60%	50.00%	5.00%	50.25%
4.D.2 Pasture, Range and Paddock Manure	N_2O	358.351	358.351	86.977	86.977	0.275%	-0.0738	*-0.0348*	1.033%	86.64%	40.00%	25.00%	47.17%
5.A.1 Forest Land remaining Forest Land	N_2O	146.369	146.369	144.336	144.336	0.456%	-0.0437	*-0.0312*	0.925%	87.56%	14.14%	70.00%	71.41%
5.E.2 Land converted to Settlements	CO_2	104.593	104.593	883.031	883.031	2.787%	-0.1282	*-0.0307*	0.911%	88.47%	19.00%	14.60%	23.96%
1.A.4.b Residential - Biomass	CH_4	126.063	126.063	164.707	164.707	0.520%	-0.0426	*-0.0302*	0.894%	89.37%	50.00%	50.00%	70.71%
5.B.2 Land converted to Cropland	CO_2	265.382	265.382	143.106	143.106	0.452%	-0.0645	*-0.0244*	0.725%	90.09%	35.00%	14.60%	37.92%
1.A.4.a Commercial/Institutional - Liquid Fuels	CO_2	1,131.478	1,131.478	98.537	98.537	0.311%	-0.2113	*-0.0215*	0.639%	90.73%	2.00%	10.00%	10.20%
1.A.2.f Other - Liquid Fuels	CO_2	944.946	944.946	137.979	137.979	0.436%	-0.1834	*-0.0187*	0.555%	91.28%	2.00%	10.00%	10.20%
4.B.Manure Management	CH_4	273.758	273.758	88.780	88.780	0.280%	-0.0592	*-0.0178*	0.528%	91.81%	2.00%	30.00%	30.07%
1.A.4.c Agriculture/Forestry/Fisheries -	CO_2	694.469	694.469	349.456	349.456	1.103%	-0.1656	*-0.0169*	0.501%	92.31%	2.00%	10.00%	10.20%

IPCC GHG Source and Sink Categories		1990 Estimate, Gg CO2-eq	1990, absolute values	2011 Estimate, Gg CO2-eq	2011 absolute values	% Level Assessment	Trend Assessment	*Trend Assessmen with Uncertainty*	% Contribution to trend	% Cumulative Total of Trend Assessment	Activity data uncertainty	Emission factor uncertainty	Combined uncertainty
Liquid Fuels													
5.C.1 Grassland remaining Grassland	CO_2	40.150	40.150	62.620	62.620	0.198%	-0.0148	*-0.0153*	0.453%	92.77%	50.00%	90.00%	102.96%
2.A.1 Cement Production	CO_2	366.123	366.123	558.657	558.657	1.763%	-0.1338	*-0.0150*	0.444%	93.21%	10.00%	5.00%	11.18%
1.A.2.e Food Processing, Beverages and Tobacco - Liquid Fuels	CO_2	798.124	798.124	33.093	33.093	0.104%	-0.1445	*-0.0147*	0.437%	93.65%	2.00%	10.00%	10.20%
2.A.3 Limestone and Dolomite Use	CO_2	141.005	141.005	4.940	4.940	0.016%	-0.0254	*-0.0127*	0.377%	94.02%	2.00%	50.00%	50.04%
1.A.3.b Road Transportation - Gasoline	CO_2	1,689.330	1,689.330	763.653	763.653	2.410%	-0.3921	*-0.0111*	0.329%	94.35%	2.00%	2.00%	2.83%
1.A.3.b Road Transportation - Diesel Oil	CO_2	616.136	616.136	1,993.449	1,993.449	6.292%	-0.3562	*-0.0101*	0.299%	94.65%	2.00%	2.00%	2.83%
2.F(a).1 Refrigeration and Air Conditioning Equipment	HFCs	0.000	0.000	74.275	74.275	0.234%	-0.0092	*-0.0098*	0.290%	94.94%	75.00%	75.00%	106.07%
1.A.1.a Public Electricity and Heat Production - Solid Fuels	CO_2	338.628	338.628	39.722	39.722	0.125%	-0.0645	*-0.0098*	0.289%	95.23%	2.00%	15.00%	15.13%

Level assessment year 1990 without LULUCF

IPCC GHG Source and Sink Categories		1990 Estimate, Gg CO2-eq	1990 Absolute values	% Level Assessment	% Cumulative Total of Level Assessment
1.A.1.a Public Electricity and Heat Production - Liquid Fuels	CO_2	3 050,347	3 050,347	11,588%	11,588%
1.A.1.a Public Electricity and Heat Production - Gaseous Fuels	CO_2	2 644,313	2 644,313	10,045%	21,633%
4.A. Enteric Fermentation	CH_4	2 148,053	2 148,053	8,160%	29,794%
1.A.3.b Road Transportation - Gasoline	CO_2	1 689,330	1 689,330	6,418%	36,211%
4.D.1. Direct Soil Emissions	N_2O	1 618,317	1 618,317	6,148%	42,359%
1.A.4.a Commercial/Institutional - Solid Fuels	CO_2	1 331,987	1 331,987	5,060%	47,419%
1.A.4.a Commercial/Institutional - Liquid Fuels	CO_2	1 131,478	1 131,478	4,298%	51,718%
4.D.3.Indirect Emissions	N_2O	1 033,873	1 033,873	3,928%	55,645%

IPCC GHG Source and Sink Categories		1990 Estimate, Gg CO2-eq	1990 Absolute values	% Level Assessment	% Cumulative Total of Level Assessment
1.A.2.f Other - Liquid Fuels	CO_2	944,946	944,946	3,590%	59,235%
1.A.2.f Other - Gaseous Fuels	CO_2	835,236	835,236	3,173%	62,408%
1.A.2.e Food Processing, Beverages and Tobacco - Liquid Fuels	CO_2	798,124	798,124	3,032%	65,440%
1.A.4.c Agriculture/Forestry/Fisheries - Gaseous Fuels	CO_2	778,520	778,520	2,958%	68,397%
1.A.4.c Agriculture/Forestry/Fisheries - Liquid Fuels	CO_2	694,469	694,469	2,638%	71,036%
1.A.3.b Road Transportation - Diesel Oil	CO_2	616,136	616,136	2,341%	73,376%
1.A.4.b Residential - Solid Fuels	CO_2	585,452	585,452	2,224%	75,600%
4.B.Manure Management	N_2O	569,677	569,677	2,164%	77,764%
1.A.3.c Railways - Liquid Fuels	CO_2	531,380	531,380	2,019%	79,783%
2.A.1 Cement Production	CO_2	366,123	366,123	1,391%	81,174%
4.D.2 Pasture, Range and Paddock Manure	N_2O	358,351	358,351	1,361%	82,535%
1.A.1.a Public Electricity and Heat Production - Solid Fuels	CO_2	338,628	338,628	1,286%	83,822%
1.A.4.a Commercial/Institutional - Gaseous Fuels	CO_2	337,481	337,481	1,282%	85,104%
6.A.2. Unmanaged Waste Disposal Sites	CH_4	329,978	329,978	1,254%	86,357%
1.A.4.b Residential - Liquid Fuels	CO_2	329,914	329,914	1,253%	87,611%
1.B.2.b Natural Gas	CH_4	285,422	285,422	1,084%	88,695%
1.A.2.c Chemicals - Liquid Fuels	CO_2	276,669	276,669	1,051%	89,746%
4.B.Manure Management	CH_4	273,758	273,758	1,040%	90,786%

IPCC GHG Source and Sink Categories		1990 Estimate, Gg CO2-eq	1990 Absolute values	% Level Assessment	% Cumulative Total of Level Assessment
1.A.2.a Iron and Steel - Gaseous Fuels	CO_2	234,464	234,464	0,891%	91,677%
1.A.4.b Residential - Gaseous Fuels	CO_2	219,607	219,607	0,834%	92,511%
1.A.2.e Food Processing, Beverages and Tobacco - Gaseous Fuels	CO_2	174,195	174,195	0,662%	93,173%
1.A.1.c Manufacture of Solid Fuels and Other Energy Industries - Solid Fuels	CO_2	163,886	163,886	0,623%	93,795%
1.A.2.d. Pulp, Paper and Print - Gaseous Fuels	CO_2	149,415	149,415	0,568%	94,363%
2.A.3 Limestone and Dolomite Use	CO_2	141,005	141,005	0,536%	94,899%
1.A.2.a Iron and Steel - Liquid Fuels	CO_2	135,757	135,757	0,516%	95,414%

IPCC GHG Source and Sink Categories (LUCF not included)		1990 Estimate, Gg CO2-eq	1990, absolute values	% Level Assessment	% Cumulative Total of Level Assessment
5.A.1 Forest Land remaining Forest Land	CO_2	-23 057,878	23 057,878	45,658%	45,658%
1.A.1.a Public Electricity and Heat Production - Liquid Fuels	CO_2	3 050,347	3 050,347	6,040%	51,698%
1.A.1.a Public Electricity and Heat Production - Gaseous Fuels	CO_2	2 644,313	2 644,313	5,236%	56,934%
4.A. Enteric Fermentation	CH_4	2 148,053	2 148,053	4,253%	61,188%
1.A.3.b Road Transportation - Gasoline	CO_2	1 689,330	1 689,330	3,345%	64,533%
4.D.1. Direct Soil Emissions	N_2O	1 618,317	1 618,317	3,205%	67,737%
1.A.4.a Commercial/Institutional - Solid Fuels	CO_2	1 331,987	1 331,987	2,638%	70,375%
1.A.4.a Commercial/Institutional - Liquid Fuels	CO_2	1 131,478	1 131,478	2,240%	72,615%

IPCC GHG Source and Sink Categories (LUCF not included)		1990 Estimate, Gg CO2-eq	1990, absolute values	% Level Assessment	% Cumulative Total of Level Assessment
4.D.3.Indirect Emissions	N_2O	1 033,873	1 033,873	2,047%	74,663%
1.A.2.f Other - Liquid Fuels	CO_2	944,946	944,946	1,871%	76,534%
1.A.2.f Other - Gaseous Fuels	CO_2	835,236	835,236	1,654%	78,188%
1.A.2.e Food Processing, Beverages and Tobacco - Liquid Fuels	CO_2	798,124	798,124	1,580%	79,768%
1.A.4.c Agriculture/Forestry/Fisheries - Gaseous Fuels	CO_2	778,520	778,520	1,542%	81,310%
1.A.4.c Agriculture/Forestry/Fisheries - Liquid Fuels	CO_2	694,469	694,469	1,375%	82,685%
1.A.3.b Road Transportation - Diesel Oil	CO_2	616,136	616,136	1,220%	83,905%
1.A.4.b Residential - Solid Fuels	CO_2	585,452	585,452	1,159%	85,064%
4.B.Manure Management	N_2O	569,677	569,677	1,128%	86,192%
1.A.3.c Railways - Liquid Fuels	CO_2	531,380	531,380	1,052%	87,244%
2.A.1 Cement Production	CO_2	366,123	366,123	0,725%	87,969%
4.D.2 Pasture, Range and Paddock Manure	N_2O	358,351	358,351	0,710%	88,679%
1.A.1.a Public Electricity and Heat Production - Solid Fuels	CO_2	338,628	338,628	0,671%	89,349%
5.B.1 Cropland remaining Cropland	CO_2	337,590	337,590	0,668%	90,018%
1.A.4.a Commercial/Institutional - Gaseous Fuels	CO_2	337,481	337,481	0,668%	90,686%
6.A.2. Unmanaged Waste Disposal Sites	CH_4	329,978	329,978	0,653%	91,339%
1.A.4.b Residential - Liquid Fuels	CO_2	329,914	329,914	0,653%	91,993%

IPCC GHG Source and Sink Categories (LUCF not included)		1990 Estimate, Gg CO2-eq	1990, absolute values	% Level Assessment	% Cumulative Total of Level Assessment
1.B.2.b Natural Gas	CH_4	285,422	285,422	0,565%	92,558%
1.A.2.c Chemicals - Liquid Fuels	CO_2	276,669	276,669	0,548%	93,106%
4.B.Manure Management	CH_4	273,758	273,758	0,542%	93,648%
5.B.2 Land converted to Cropland	CO_2	265,382	265,382	0,525%	94,173%
1.A.2.a Iron and Steel - Gaseous Fuels	CO_2	234,464	234,464	0,464%	94,638%
1.A.4.b Residential - Gaseous Fuels	CO_2	219,607	219,607	0,435%	95,072%
1.A.2.e Food Processing, Beverages and Tobacco - Gaseous Fuels	CO_2	174,195	174,195	0,345%	95,417%

ANNEX 2: DETAILED DISCUSSION OF METHODOLOGY AND DATA FOR ESTIMATING CO_2 EMISSIONS FROM FOSSIL FUEL COMBUSTION

GUIDANCE MANUAL FOR CO_2 EMISSION ESTIMATIONS

(Developed in accordance with UNFCCC and IPCC recommendations and physical characteristics of fuels used in Latvia)

V.Bergmanis

Riga

2004

Annotation

The report is done in accordance with conditions of contract No. 15 of 17 May 2004. Guidance manual of CO_2 emissions from stationary fuel combustion installations estimations is developed in accordance to requirements from IPCC Guidelines. It means that according to developed guidance, CO_2 emissions from every object could be determined using physical characteristics of combusted fuel and amount of consumed fuel. In case such physical characteristics are not available, average estimated data for types of fuels used in Latvia could be used (Table 1).

Following additional information are given:

capacity of combustion installations,
particle content of fuel,
concept of heat of combustion and use of it in estimations
discretion in composition of thermal balance of combustion installation that provide better understanding of combustion installations operations and processes that generate CO_2 emissions.

The report is developed to help enterprises that operate with combustion installations, Regional Environmental Boards (REB) and environment experts calculate CO_2 emission from stationary fuel combustion.

Introduction

Guidance for practical determination of CO_2 emission factors in the case of:

combusted type of fuel and physical qualities of it;
combusted amount of fuel,

is developed for enterprises to fulfil the requirements of national legislation (Cabinet of Ministers Regulations "About taxes of natural resources" and Cabinet of Ministers Regulation No. 555).

Stationary combustion installations are divided in:

boiler units – generation of electricity and heat for public utilities;
technological equipment combustion installations that are divided in:

installations where flue gases directly do not collide with produced products (mainly food industry – bread baking, malt drying;

Installations where flue gases directly collide with produced products (construction materials and metal production).

In point 1 and 2.1 mentioned installations emission thresholds of noxious products are determined and guidance of CO_2 emission estimations could be used. In other cases technological specific of production should be taken into account.

Mathematical expression of CO_2 emission determination given in first chapter is used in specified calculation using data from fuel certificates and combusted amount of fuels. In cases when data from fuel certificates are not available (carbon content and net calorific value of fuel), CO_2 emission factors (Table 1) that are estimated using mathematical expression, IPCC Guidelines and average values of physical qualities of fuels used in Latvia are used.

In CO_2 emission determination it is assumed that all carbon stored in fuel transforms into CO_2 in combustion process. Practically part of carbon (depends on type of fuel, type of furnaces, maintenance conditions of boiler units) doesn't burn fully and forms CO that transforms into CO_2 in length of time (approximately 48 h).

Consequently enterprise operating combustion installation and permit chemically incomplete combustion (q_3) has to consume bigger amount of fuel to obtain necessary amount if heat and therefore bigger amount of CO_2 is generated.

Part of fuel did not participate in combustion processes. This part is composed by non-combusted fuel (carbon) that is discharged from combustion installation with ashes, slag and soot. Non-combusted part of fuel is accounted as mechanically incomplete combustion losses q_4 in thermal balance of combustion installation. These loses are rather big if solid fuels – coal, peat, are combusted (ashes, slag), smaller – if liquid fuels are combusted (soot) and minimal – if gaseous fuels are combusted. For gaseous fuels q_4 is technological losses (maintenance of installations and safe work requirements provision) that are gas-fittings leakage in units processes to avoid possible explosions. In leakage process other greenhouse effect gas – methane, is emitted to atmosphere.

Brief discretion in particle content of organic fuel, relevance between fuel working, dry and combusted volumes, gross and net calorific values and suggestions in what cases previously mentioned relevancies could be used in estimations are given in the report.

1. CO_2 emission estimations for combusted organic fuels (guidance manual)

In combustion of organic fuels process carbon (C) in fuel connects with air oxygen as a result carbon dioxide (CO_2) is made. In case of chemically incomplete combustion also carbon monoxide (CO) is made that in approximately 48 h time connects with air oxygen and transforms in CO_2.

To estimate CO_2 emissions, it is necessary to know:

combusted type of fuel;
amount of combusted fuel B_n;
carbon content (C^d %) in working mass of fuel;
net calorific values of working mass of fuel (Q_z^d, MJ/kg (m^3)).

Easier way to estimate CO_2 emissions is to calculate emission factor (E) and consumed amount of fuel (B_q) marked in heat amount units (MJ, GJ, TJ…. / time period). For E and B_q estimation necessary data is collected from fuel certificates (Quality note) or analyse data and accounting of combusted fuels.

For emission factor calculation following relevance is used:

$$EF_{CO_2} = \frac{C^d \times M_{CO_2} \times 1000}{Q_z^d \times M_C \times 100} = \frac{C^d}{Q_z^d} \times 36{,}6413$$

where:
EF_{CO2} – emission factor for CO_2 (kg CO_2/MJ)
Q_z^d – net calorific value of fuel (MJ/kg (m^3))
C^d – carbon content in fuel (%)
M_{CO2} – molecule weight for CO_2 – 44, 0098 (g/mcl)
Mc – molecule weight for C – 12,011 (g/mcl)
1000 – switching from MJ to GJ
100 – percentage determination

Heat amount generated into furnaces with fuel is estimated:

$$B_q = B_n \times Q_z^d$$

where:
Bn – consumption of fuel in natural units in time period, tn (10^3 □ m^3)

CO_2 emissions in time period are estimated:

$$CO_2 = E_{CO_2} \times B_q$$

where:
CO_2 – estimated emissions, kg (t)
E_{CO2} – calculated emission factor, kg/GJ (t/TJ);
B_q - heat amount generated into furnaces with fuel, GJ (TJ).

Practically all amount of fuel input in furnaces doesn't take part in combustion process. Part of non-combusted fuels is discharged from furnace with ashes, soot and slag. These are so-called mechanically incomplete combustion losses. That's why oxidation factor p has to be taken into account in CO2 emission estimations.

Oxidation factor:

$$p = \frac{100 - q_4}{100}$$

Practically CO_2 emissions:

$$E'_{CO_2} = E_{CO_2} p$$

If data from fuel certificates are not available, average data summarized in Table 1 could be used in CO_2 emission estimations. Data reported in table are estimated by using average data from fuel certificates of fuels used in Latvia and suggestions from IPCC Good Practice Guidance and Uncertainty Management in National Greenhouse Gas Inventories.

Table 1 Carbon content in organic fuels working masses, net calorific values and CO_2 emission factor

Type of fuel	Carbon content C^d %	NCV (Q_z^d) MJ/kg	Emission factor without oxidation factor (E CO_2) kg/GJ	Oxidation factor (p)	Emission factor with oxidation factor (EF CO_2) kg/GJ
Coal	67,32	26,22	94,08	0,98	**92,20**
Wood, W^d = 55%	20,11	6,70*	109,98	0,98	**107,78**
Peat, W^d = 40%	29,07	10,05	106,07	0,98**	**103,95**
Residual fuel oil	85,72	40,60	77,43	0,99	**76,65**
Diesel oil, liquid oven fuel	86,68	42,49	74,81	0,99	**74,06**
Motor gasoline (for off-roads****)	83,13	43,97	69,33	0,99	**68,64**
Natural gas	51,54	33,66***	55,54	0,995	**55,26**
LPG	77,99	45,54	62,80	0,995	**62,49**
Shale oil	82,82	39,35	76,19	0,99	**75,43**
Coke	63,87	26,79	88,43	0,98	**85,68**
Lubricants	83,77	41,86	73,33	0,99	**72,60**
Other kerosene	85,17	43,20	72,30	0,99	**71,58**
Jet fuel	85,18	43,21	72,29	0,99	**71,57**

* for wood – Q_z^d ir TJ/1000m^3

** for electricity production p = 0,99

*** natural gas – Q_z^d is MJ/m^3

**** off roads – vehicles not involved in traffic, for example, asphalt pavers, and other commercial and household technological equipment, for example, grass rollers

Emission factor values (E^n_{CO2}) that are determined for natural unit of consumed amount of fuel – t, (1000 m^3) could be used equally in CO_2 emission estimations. These values are reported in Table 2.

Table 2 CO_2 emission factors for natural units of organic fuel

Type of fuel	E^n_{CO2}, kg/t (1000 m^3)
Coal	2417
Wood, W^d = 55%	722
Peat, W^d = 40%	1044
Residual fuel oil	3110
Diesel oil, liquid oven fuel	3144
Motor gasoline (for off-roads)	3016
Natural gas	1879
LPG	2844
Shale oil	2968
Coke	2294
Lubricants	3039
Other kerosene	3090
Jet fuel	3089

Following relevance for very approximate (control) CO2 emission estimations could be used:

$$E_k \approx \frac{B_n \times C^d \times M_{CO_2}}{M_C \times 100} \approx B_n \times C^d \times 0{,}0366413$$

where:
B_n – consumed natural units amount of fuels, t (1000 m^3)
C^d – carbon content in working mass of fuel, %

Note: CO_2 emissions of renewable energy resources are not estimated. Emission factors given in Table 1.1 and Table 1.2 could be used as comparative values.

2. Installed capacity

Following concept of combustion installations (boiler units) capacity are used in practice:

capacity **N**;
installed capacity $\mathbf{N_{nom}}$;
with fuel input installed capacity $\mathbf{N_{th}}$;

N – momentary capacity of combustion installation (existing moment). Temporary it can exceed installed capacity. Mostly it is lower than installed capacity during operating time of combustion installations. As often as not average capacity of specific time period N_{vid} (h, day, and month) is used.

$\mathbf{N_{nom}}$ – capacity that could be used permanent without harmful influence on installation safety. For New installations installed capacity is equal to boiler unit installed capacity that is reported in technical documentation of installation – passport. For operating installations installed capacity could be determined by control (testing) institution – boiler unit inspection.

$\mathbf{N_{th}}$ – capacity input with fuels marked in MW to provide consummation of installed capacity.

$$N_{th} = \frac{N_{nom}}{\eta_{ka}}$$

where:
η_{ka} – boiler unit (boiler-house) efficiency factor with nominal load.

It means: to reach installed capacity, it is necessary to input in combustion installation more fuel than it is required for furnaces installed capacity (in capacity units) to cover all heat losses.

3. Organic fuels

Particle content off organic fuel:

$$C + H + N + O + S + A + W = 100 \text{ (\% mass content)}$$

where:
C – carbon content in solid or liquid fuels (%);
H – hydrogen content in solid or liquid fuels (%);
N – nitrogen content in solid or liquid fuels (%)
O – oxygen content in solid or liquid fuels (%)
S – sulphur content in solid or liquid fuels (%)
A – ash content in solid or liquid fuels (%)
W – moisture content in solid or liquid fuels (%)

For gaseous fuels usually it is declared hydrocarbons CnHm, hydrogen, nitrogen and CO2 (% volume units):

$$CH_4 + C_2H_6 + C_3H_8 + C_4H_{10} + C_5H_{12} + H_2 + N_2 + CO_2 = 100$$

According to mass content fuel is divided:

working mass of fuels (marked with index **d**)

$$C^d + H^d + N^d + O^d + S^d + A^d + W^d = 100$$

dry mass of fuels (marked with index **s**)

$$C^s + H^s + N^s + O^s + S^s + A^s = 100$$

burning mass of fuels (marked with index **deg**)

$$C^{deg} + H^{deg} + N^{deg} + O^{deg} + S^{deg} = 100$$

As it can be seem from these expressions for different masses particle percentage content is different. Mostly particle content of dry mass is given in fuel certificates, except moisture content – for working mass. In this case recalculations have to be done and all indices have to be determined as for working mass.

Coefficients for fuel content recalculations

Given mass content	**Needed mass content**		
	Working	**Dry**	**Burning**
Working	1	$\frac{100}{100 - W^d}$	$\frac{100}{100 - (A^d + W^d)}$
Dry	$\frac{100 - W^d}{100}$	1	$\frac{100}{100 - A^s}$
Burning	$\frac{100 - (A^d + W^d)}{100}$	$\frac{100 - A^s}{100}$	1

In practice gross and net calorific values of organic fuels working mass is used.

For solid and liquid fuels net calorific values are estimated with equations:

$$Q_z^d = 339C^d + 1031H^d - 109(O^d - S_g^d) - 25W^d \text{ (kJ/kg)}$$

(S_g – fugitive sulphur amount)

Relevance between net and gross calorific values:

$$Q_z^d = Q_a^d - 25(9H^d + W) \text{ (kJ/kg)}$$

As it can be seen from these expressions gross calorific values of fuels is always higher than net calorific values. That's because value of condensation heat from water vapour that contain flue gasses is used, respectively outgoing flue gases temperature is lower than condensation temperature of water vapour (dew-point). That kind of operations is allowable if fuel doesn't contain sulphur. Otherwise final heating surfaces, gas lines and smokestack have to be safeguarded from aggressive environment (acids) influence and condensate neutralization have to be done.

4. Explanation and suggestions

1. In IPCC methodology [L1, Chapter 1.Energy 1.1 and 2.Energy 2.1.1.2] it is determined that in each country all available data have to be used in estimation of CO_2 emission factors for different fuel types and only when these data aren't available data from methodology could be used. It was taken into account when CO_2 emission factors for fuels used in Latvia were estimated.

2. Country's average CO_2 emission factors are estimated using actual data of fuel consumption and types [L1 chapter 1.2.1]. These data are obtained by Central Statistical Bureau of Latvia. Also in L1 it is stated that only part of fuel consumption used for acquisition of Energy has to be taken into account instead of the part that is used in technological processes. In the same chapter it is stated that amount of all combusted fuel types has to be estimated by using the same output measures. In the energy balance prepared by Central Statistical Bureau fuel consumption is estimated by using net calorific value of working volume of each particular type of fuel Q_z^d, but for natural gas – gross calorific value Q_a (it is recommendation of EUROSTAT). It has to be taken into account in estimation of total country's CO_2 emissions.

3. In total amount of CO_2 emissions leakage of gas (ventilation and technological losses) in the extraction fields of coal-gas aren't taken into account. It is referable to the exploitation of natural gas utilization equipment. Oxidation coefficient for the gaseous fuels is used in the estimation of CO_2 emissions. Leakage of gas is accounted as fugitive CH_4 emissions.

4. Oxidation coefficient for coal p = 0.98 is determined as global average. Oxidation factor is depending on type of coal and type of combustion installation. That's why in national account it could descend to p = 0.91, it means q_4 = 9% [L1].

5. In cases if net calorific values of fuels Q_z^d aren't available but only Q_a data it is possible to use average values in the estimation [L1]:

for liquid and solid fuels $Q_z^d \sim 0{,}95\ Q_a$

for gaseous fuels $Q_z^d \sim 0{,}9\ Q_a^d$

6. If installed capacity introduced with fuel marked in heat measures N_{th} is used in the estimations, oxidation coefficient isn't used because it is implicitly taken into account as losses of mechanically incomplete combustion and included in coefficient of efficiency of combustion installation $\square_{ka}$.

ANNEX 3: OTHER DETAILED METHODOLOGICAL DESCRIPTIONS FOR INDIVIDUAL SOURCE OR SINK CATEGORIES, INCLUDING FOR KP-LULUCF ACTIVITIES

A.3.1 Energy (excluding Transport sector)

Type of fuel	Sulphur content																
	1990-1995	1996	1997	1998	1999	2000	2001	2002	2003	2004	2005	2006	2007	2008	2009	2010	2011
Diesel	0.3	0.3	0.265	0.333	0.226	0.298	0.284	0.333	0.209	0.188	0.136	0.124	0.184	0.157	0.141	0.213	0.235
RFO	2	2	2.122	2.097	2.005	2.078	1.983	1.922	1.972	1.452	1.292	1.03	1.184	0.888	0.613	1.418	0.86
Gasoline	0.015	0.015	0.015	0.015	0.015	0.015	0.015	0.015	0.015	0.015	0.015	0.015	0.015	0.015	0.015	0.015	0.015
Jet fuel	0.05	0.05	0.05	0.05	0.05	0.05	0.05	0.05	0.05	0.05	0.05	0.05	0.05	0.05	0.05	0.05	0.05
Jet fuel	0.05	0.05	0.05	0.05	0.05	0.05	0.05	0.05	0.05	0.05	0.05	0.05	0.05	0.05	0.05	0.05	0.05
other liquids	0.5514	0.551	0.551	0.564	0.523	0.428	0.417	0.3	0.253	0.215	0.211	0.229	0.268	0.183	0.146	0.146	0.146
LPG	0.2	0.2	0.2	0.2	0.15	0.15	0.15	0.014	0.013	0.014	0.013	0.011	0.02	0.02	0.005	0.005	0.005
Shale oil	1	1	1	1	0.8	0.735	0.834	0.545	0.616	0.647	0.628	0.8	0.817	0.84	0.85	0.55	0.464
Coal	1.8	1.8	1.47	1.37	1.06	0.90	0.87	0.83	0.67	0.67	0.73	0.644	0.438	0.412	0.338	0.334	0.377
coke	1.8	1.2	0.60	0.40	0.40	0.40	0.40	0.40	0.40	0.40	0.40	0.4	0.4	0.4	0.4	0.4	0.4
oil shale	1	1				0.05	0.70	1.00	1.00	0.86							
Peat	0.3	0.3	0.28	0.22	0.21	0.24	0.22	0.27	0.27	0.25	0.27	0.245	0.217	0.116	0.21	0.17	0.17

Type of fuel	EF (Gg/PJ)																
	1990-1995	1996	1997	1998	1999	2000	2001	2002	2003	2004	2005	2006	2007	2008	2009	2010	2011
Diesel	0.141	0.141	0.125	0.157	0.106	0.140	0.133	0.157	0.098	0.088	0.064	0.059	0.087	0.074	0.067	0.100	0.111
RFO	0.966	0.966	1.024	1.012	0.968	1.003	0.957	0.928	0.952	0.701	0.624	0.497	0.572	0.429	0.296	0.685	0.415
Gasoline	0.007	0.007	0.007	0.007	0.007	0.007	0.007	0.007	0.007	0.007	0.007	0.007	0.007	0.007	0.007	0.007	0.007
Jet fuel	0.023	0.023	0.023	0.023	0.023	0.023	0.023	0.023	0.023	0.023	0.023	0.023	0.023	0.023	0.023	0.023	0.023
Jet fuel	0.023	0.023	0.023	0.023	0.023	0.023	0.023	0.023	0.023	0.023	0.023	0.023	0.023	0.023	0.023	0.023	0.023
other liquids	0.263	0.263	0.263	0.269	0.250	0.205	0.199	0.143	0.121	0.103	0.101	0.109	0.128	0.087	0.070	0.070	0.070
LPG	0.088	0.088	0.088	0.088	0.066	0.066	0.066	0.006	0.006	0.006	0.006	0.005	0.009	0.009	0.002	0.002	0.002
Shale oil	0.508	0.508	0.508	0.508	0.407	0.374	0.424	0.277	0.313	0.329	0.319	0.407	0.415	0.427	0.432	0.280	0.236
Coal	1.236	1.236	1.007	0.939	0.730	0.615	0.598	0.570	0.457	0.458	0.498	0.442	0.301	0.283	0.232	0.229	0.259
coke	1.209	0.806	0.403	0.269	0.269	0.269	0.269	0.269	0.269	0.269	0.269	0.269	0.269	0.269	0.269	0.269	0.269
oil shale	1.957	1.957				0.098	1.370	1.957	1.957	1.683							
Peat	0.507	0.507	0.474	0.370	0.347	0.400	0.364	0.462	0.448	0.429	0.458	0.414	0.367	0.196	0.354	0.288	0.288

Notes:
Gasoline – due to legislation
Shale oil – average amount from database Nr. 2-Air
Peat – average amount from database Nr. 2-Air
Coal - average amount from database Nr. 2-Air and additional calculated average amount by periods
Diesel oil (transport) – due to legislation

A.3.2 Transport

Distribution of road transport fleet by subsectors and layers, year 2011

Subsector	Technology	Population	Mileage
Passenger Cars			
Gasoline <1,4 l	ECE 15/00-01	608	1000
Gasoline <1,4 l	ECE 15/02	782	1000
Gasoline <1,4 l	ECE 15/03	1303	2000
Gasoline <1,4 l	ECE 15/04	5992	3000
Gasoline <1,4 l	PC Euro 1 - 91/441/EEC	7099	4000
Gasoline <1,4 l	PC Euro 2 - 94/12/EEC	6043	11000
Gasoline <1,4 l	PC Euro 3 - 98/69/EC Stage2000	7234	21000
Gasoline <1,4 l	PC Euro 4 - 98/69/EC Stage2005	10032	23000
Gasoline <1,4 l	PC Euro 5 - EC 715/2007	1397	28000
Gasoline 1,4 - 2,0 l	ECE 15/00-01	3676	1000
Gasoline 1,4 - 2,0 l	ECE 15/02	4411	1000
Gasoline 1,4 - 2,0 l	ECE 15/03	5146	2000
Gasoline 1,4 - 2,0 l	ECE 15/04	35778	3000
Gasoline 1,4 - 2,0 l	PC Euro 1 - 91/441/EEC	48449	6000
Gasoline 1,4 - 2,0 l	PC Euro 2 - 94/12/EEC	49137	12000
Gasoline 1,4 - 2,0 l	PC Euro 3 - 98/69/EC Stage2000	25711	20000
Gasoline 1,4 - 2,0 l	PC Euro 4 - 98/69/EC Stage2005	28590	23000
Gasoline 1,4 - 2,0 l	PC Euro 5 - EC 715/2007	2243	29000
Gasoline >2,0 l	ECE 15/00-01	818	1000
Gasoline >2,0 l	ECE 15/02	857	1000
Gasoline >2,0 l	ECE 15/03	1169	2000
Gasoline >2,0 l	ECE 15/04	4949	5000
Gasoline >2,0 l	PC Euro 1 - 91/441/EEC	8505	9000
Gasoline >2,0 l	PC Euro 2 - 94/12/EEC	14036	15000
Gasoline >2,0 l	PC Euro 3 - 98/69/EC Stage2000	10398	22450
Gasoline >2,0 l	PC Euro 4 - 98/69/EC Stage2005	9168	25000
Gasoline >2,0 l	PC Euro 5 - EC 715/2007	587	30000
Diesel <2,0 l	Conventional	14396	10000
Diesel <2,0 l	PC Euro 1 - 91/441/EEC	24029	14000
Diesel <2,0 l	PC Euro 2 - 94/12/EEC	26964	18000
Diesel <2,0 l	PC Euro 3 - 98/69/EC Stage2000	27565	21000
Diesel <2,0 l	PC Euro 4 - 98/69/EC Stage2005	18897	24000
Diesel <2,0 l	PC Euro 5 - EC 715/2007	2695	30000
Diesel >2,0 l	Conventional	5708	11000
Diesel >2,0 l	PC Euro 1 - 91/441/EEC	13354	16000
Diesel >2,0 l	PC Euro 2 - 94/12/EEC	22197	21000
Diesel >2,0 l	PC Euro 3 - 98/69/EC Stage2000	23240	23000
Diesel >2,0 l	PC Euro 4 - 98/69/EC Stage2005	14104	25000
Diesel >2,0 l	PC Euro 5 - EC 715/2007	1257	30000
LPG	Conventional	6401	13000
LPG	PC Euro 1 - 91/441/EEC	5737	16000
LPG	PC Euro 2 - 94/12/EEC	6381	20220
LPG	PC Euro 3 - 98/69/EC Stage2000	2725	24000
LPG	PC Euro 4 - 98/69/EC Stage2005	1073	28000
LPG	PC Euro 5 - EC 715/2007	20	30000
Light Duty Vehicles			
LPG	Conventional	136	18000

Subsector	Technology	Population	Mileage
LPG	LD Euro 1 - 93/59/EEC	108	20000
LPG	LD Euro 2 - 96/69/EEC	152	22000
LPG	LD Euro 3 - 98/69/EC Stage2000	41	24000
LPG	LD Euro 4 - 98/69/EC Stage2005	43	25000
LPG	LD Euro 5 - 2008 Standards	2	26000
Gasoline <3,5t	Conventional	342	14000
Gasoline <3,5t	LD Euro 1 - 93/59/EEC	370	16000
Gasoline <3,5t	LD Euro 2 - 96/69/EEC	650	19000
Gasoline <3,5t	LD Euro 3 - 98/69/EC Stage2000	349	20000
Gasoline <3,5t	LD Euro 4 - 98/69/EC Stage2005	647	22000
Gasoline <3,5t	LD Euro 5 - 2008 Standards	59	25000
Diesel <3,5 t	Conventional	2259	19000
Diesel <3,5 t	LD Euro 1 - 93/59/EEC	4670	21000
Diesel <3,5 t	LD Euro 2 - 96/69/EEC	6904	26000
Diesel <3,5 t	LD Euro 3 - 98/69/EC Stage2000	6612	29000
Diesel <3,5 t	LD Euro 4 - 98/69/EC Stage2005	7758	30000
Diesel <3,5 t	LD Euro 5 - 2008 Standards	1343	33000
Heavy Duty Trucks			
LPG	Conventional	459	20000
LPG	HD Euro I - 91/542/EEC Stage I	12	25000
LPG	HD Euro II - 91/542/EEC Stage II	56	35000
Gasoline >3,5 t	Conventional	1300	20000
Gasoline >3,5 t	HD Euro I - 91/542/EEC Stage I	81	20000
Gasoline >3,5 t	HD Euro II - 91/542/EEC Stage II	98	25000
Gasoline >3,5 t	HD Euro III - 2000 Standards	13	35000
Rigid <=7,5 t	Conventional	1132	40000
Rigid <=7,5 t	HD Euro I - 91/542/EEC Stage I	712	50000
Rigid <=7,5 t	HD Euro II - 91/542/EEC Stage II	665	55000
Rigid <=7,5 t	HD Euro III - 2000 Standards	482	60000
Rigid <=7,5 t	HD Euro IV - 2005 Standards	450	65000
Rigid <=7,5 t	HD Euro V - 2008 Standards	97	65000
Rigid 7,5 - 12 t	Conventional	573	55000
Rigid 7,5 - 12 t	HD Euro I - 91/542/EEC Stage I	325	60000
Rigid 7,5 - 12 t	HD Euro II - 91/542/EEC Stage II	325	65000
Rigid 7,5 - 12 t	HD Euro III - 2000 Standards	228	65000
Rigid 7,5 - 12 t	HD Euro IV - 2005 Standards	203	75000
Rigid 7,5 - 12 t	HD Euro V - 2008 Standards	31	75000
Rigid 12 - 14 t	Conventional	185	60000
Rigid 12 - 14 t	HD Euro I - 91/542/EEC Stage I	106	65000
Rigid 12 - 14 t	HD Euro II - 91/542/EEC Stage II	58	65000
Rigid 12 - 14 t	HD Euro III - 2000 Standards	18	70000
Rigid 12 - 14 t	HD Euro IV - 2005 Standards	41	75000
Rigid 12 - 14 t	HD Euro V - 2008 Standards	6	75000
Rigid 14 - 20 t	Conventional	992	60000
Rigid 14 - 20 t	HD Euro I - 91/542/EEC Stage I	1045	65000
Rigid 14 - 20 t	HD Euro II - 91/542/EEC Stage II	1785	70000
Rigid 14 - 20 t	HD Euro III - 2000 Standards	1498	70000
Rigid 14 - 20 t	HD Euro IV - 2005 Standards	2375	80000
Rigid 14 - 20 t	HD Euro V - 2008 Standards	964	80000
Rigid 20 - 26 t	Conventional	305	65000
Rigid 20 - 26 t	HD Euro I - 91/542/EEC Stage I	338	70000

Subsector	Technology	Population	Mileage
Rigid 20 - 26 t	HD Euro II - 91/542/EEC Stage II	356	75000
Rigid 20 - 26 t	HD Euro III - 2000 Standards	288	75000
Rigid 20 - 26 t	HD Euro IV - 2005 Standards	771	85000
Rigid 20 - 26 t	HD Euro V - 2008 Standards	131	85000
Rigid 26 - 28 t	Conventional	45	70000
Rigid 26 - 28 t	HD Euro I - 91/542/EEC Stage I	57	75000
Rigid 26 - 28 t	HD Euro II - 91/542/EEC Stage II	50	75000
Rigid 26 - 28 t	HD Euro III - 2000 Standards	43	75000
Rigid 26 - 28 t	HD Euro IV - 2005 Standards	40	85000
Rigid 26 - 28 t	HD Euro V - 2008 Standards	4	85000
Rigid 28 - 32 t	Conventional	16	70000
Rigid 28 - 32 t	HD Euro I - 91/542/EEC Stage I	42	75000
Rigid 28 - 32 t	HD Euro II - 91/542/EEC Stage II	61	75000
Rigid 28 - 32 t	HD Euro III - 2000 Standards	42	80000
Rigid 28 - 32 t	HD Euro IV - 2005 Standards	59	85000
Rigid 28 - 32 t	HD Euro V - 2008 Standards	18	85000
Rigid >32 t	Conventional	14	70000
Rigid >32 t	HD Euro I - 91/542/EEC Stage I	23	75000
Rigid >32 t	HD Euro II - 91/542/EEC Stage II	36	75000
Rigid >32 t	HD Euro III - 2000 Standards	35	80000
Rigid >32 t	HD Euro IV - 2005 Standards	91	85000
Rigid >32 t	HD Euro V - 2008 Standards	13	85000
Articulated 14 - 20 t	Conventional	432	60000
Articulated 14 - 20 t	HD Euro I - 91/542/EEC Stage I	456	65000
Articulated 14 - 20 t	HD Euro II - 91/542/EEC Stage II	779	70000
Articulated 14 - 20 t	HD Euro III - 2000 Standards	654	70000
Articulated 14 - 20 t	HD Euro IV - 2005 Standards	1036	80000
Articulated 14 - 20 t	HD Euro V - 2008 Standards	420	85000
Articulated 20 - 28 t	Conventional	541	65000
Articulated 20 - 28 t	HD Euro I - 91/542/EEC Stage I	685	70000
Articulated 20 - 28 t	HD Euro II - 91/542/EEC Stage II	602	71100
Articulated 20 - 28 t	HD Euro III - 2000 Standards	525	75000
Articulated 20 - 28 t	HD Euro IV - 2005 Standards	492	85000
Articulated 20 - 28 t	HD Euro V - 2008 Standards	50	85000
Articulated 28 - 34 t	Conventional	36	70000
Articulated 28 - 34 t	HD Euro I - 91/542/EEC Stage I	56	75000
Articulated 28 - 34 t	HD Euro II - 91/542/EEC Stage II	91	75000
Articulated 28 - 34 t	HD Euro III - 2000 Standards	89	75000
Articulated 28 - 34 t	HD Euro IV - 2005 Standards	231	85000
Articulated 28 - 34 t	HD Euro V - 2008 Standards	33	85000
Buses			
Urban Buses	Conventional	12	25000
Urban Buses	HD Euro I - 91/542/EEC Stage I	5	35000
Urban Buses	HD Euro II - 91/542/EEC Stage II	16	35000
Urban Buses Midi <=15 t	Conventional	355	45000
Urban Buses Midi <=15 t	HD Euro I - 91/542/EEC Stage I	209	50000
Urban Buses Midi <=15 t	HD Euro II - 91/542/EEC Stage II	256	60000
Urban Buses Midi <=15 t	HD Euro III - 2000 Standards	354	65000
Urban Buses Midi <=15 t	HD Euro IV - 2005 Standards	526	75000
Urban Buses Midi <=15 t	HD Euro V - 2008 Standards	167	75000
Coaches Standard <=18 t	Conventional	361	45000

Subsector	Technology	Population	Mileage
Coaches Standard <=18 t	HD Euro I - 91/542/EEC Stage I	265	55000
Coaches Standard <=18 t	HD Euro II - 91/542/EEC Stage II	177	60000
Coaches Standard <=18 t	HD Euro III - 2000 Standards	150	65000
Coaches Standard <=18 t	HD Euro IV - 2005 Standards	170	75000
Coaches Standard <=18 t	HD Euro V - 2008 Standards	8	75000
Coaches Articulated >18 t	Conventional	63	40000
Coaches Articulated >18 t	HD Euro I - 91/542/EEC Stage I	183	50000
Coaches Articulated >18 t	HD Euro II - 91/542/EEC Stage II	164	55000
Coaches Articulated >18 t	HD Euro III - 2000 Standards	198	55000
Coaches Articulated >18 t	HD Euro IV - 2005 Standards	53	55000
Coaches Articulated >18 t	HD Euro V - 2008 Standards	9	55000
Mopeds			
<50 cm³	Conventional	167	1400
<50 cm³	Mop - Euro I	1294	1500
<50 cm³	Mop - Euro II	9102	1500
Motorcycles			
2-stroke >50 cm³	Conventional	1028	1400
2-stroke >50 cm³	Mot - Euro I	1113	2000
2-stroke >50 cm³	Mot - Euro II	418	2000
2-stroke >50 cm³	Mot - Euro III	783	2000
4-stroke <250 cm³	Mot - Euro III	292	500
4-stroke 250 - 750 cm³	Conventional	837	1800
4-stroke 250 - 750 cm³	Mot - Euro I	1289	2500
4-stroke 250 - 750 cm³	Mot - Euro II	526	2500
4-stroke 250 - 750 cm³	Mot - Euro III	1026	3000
4-stroke >750 cm³	Conventional	517	2300
4-stroke >750 cm³	Mot - Euro I	739	2500
4-stroke >750 cm³	Mot - Euro II	292	2500
4-stroke >750 cm³	Mot - Euro III	723	3000

A.3.3 Industrial Processes Sector

Table 1 HFC–134a estimation from domestic refrigeration

	1995	1996	1997	1998	1999	2000	2001	2002	2003	2004	2005	2006	2007	2008	2009	2010	2011
Amount of inhabitants	2469531	2444912	2420789	2399248	2381715	2364254	2345768	2331480	2319203	2306434	2294590	2281305	2270894	2261294	2248374	2229641	2074605
Amount of households (units)	1009791.2	999724.52	989,861	981,053	973,883	966,743	975785	958402	967065	986557	997821	1018096	1035713	1042168	1035126	1035126	1035126
Amount of households (%)	40.89%	40.89%	40.89%	40.89%	40.89%	40.89%	41.6%	41.1%	41.7%	42.8%	43.5%	44.6%	45.6%	46.1%	46.0%	46.4%	49.9%
Amount of refrigerators in households (units)	874479.2	865761.43	861,773	858,617	856,822	854,988	867472.865	866395.408	888732.735	921444.238	946932.129	981444.544	999463.045	1006734.29	1000966.84	1002001.97	1002001.97
Amount of refrigerators in households (%)	86.6%	86.6%	87.1%	87.5%	88.0%	88.4%	88.9%	90.4%	91.9%	93.4%	94.9%	96.4%	96.5%	96.6%	96.7%	96.80%	96.80%
Amount of freezers in households (units)	22,215	21,994	23,955	25,900	27,853	29,776	32,201	42936.4096	54,736	67,480	80,025	93,665	90,625	86,500	81,257	76,599	76,599
Amount of freezers in households (%)	2.2%	2.2%	2.4%	2.6%	2.9%	3.1%	3.3%	4.5%	5.7%	6.8%	8.0%	9.2%	8.8%	8.3%	7.9%	7.4%	7.4%
Refrigerators and freezers containing HFC-134a (%)	5.0%	7.0%	8.0%	9.0%	11.0%	13.0%	15.0%	18.0%	22.0%	26.0%	30.0%	34.0%	38.0%	42.0%	45.0%	48.0%	51.0%
Amount of refrigerators containing HFC-134a (units)	43723.96	60603.3	68941.8126	77275.5438	94250.4744	111148.429	130120.93	155951.173	195521.202	239575.502	284079.639	333691.145	379795.957	422828.401	450435.079	480960.945	511021.004
Amount of freezers containing HFC-134a (units)	1110.7703	1539.5758	1916.37016	2330.98075	3063.83674	3870.84081	4830.13575	7728.55373	12041.8934	17544.9297	24007.5733	31846.0429	34437.4573	36329.9765	36565.826	36767.6755	39065.6552
HFC-134a in refrigerators (140 g) (kg)	6121.3544	8484.462	9651.85376	10818.5761	13195.0664	15560.7800	18216.9302	21833.1643	27372.9682	33540.5703	39771.1494	46716.7603	53171.434	59195.9761	63060.911	67334.5322	71542.9405
HFC-134a in freezers (140 g) (kg)	155.50785	215.54061	268.291823	326.337306	428.937144	541.917714	676.219005	1081.99752	1685.86507	2456.29016	3361.06026	4458.446	4821.24402	5086.19671	5119.21563	5147.47457	5469.19173
HFC-134a in stocks (t)	6.2768623	8.7000026	9.92014558	11.1449134	13.6240035	16.1026978	18.8931492	22.9151618	29.0588333	35.9968604	43.1322097	51.1752063	57.992678	64.2821728	68.1801267	72.4820068	77.0121322
HFC-134a charging one in a lifetime for refrigerators – (176.25 g) (kg)	3.7212	5.1577	5.8674	6.5766	8.0213	9.4594	7.3827	8.8483	11.0934	13.5929	16.1180	18.9328	21.5487	23.9903	25.5566	27.2886	28.9941
HFC-134a charging one in a lifetime for freezers – (176.25 g) (kg)	0.0945	0.1310	0.1631	0.1984	0.2608	0.3294	0.2741	0.4385	0.6832	0.9955	1.3621	1.8069	1.9539	2.0613	2.0747	2.0861	2.2165
HFC-134a charged	0.0038	0.0053	0.0060	0.0068	0.0083	0.0098	0.0077	0.0093	0.0118	0.0146	0.0175	0.0207	0.0235	0.0261	0.0276	0.0294	0.0312
HFC-134a leakage during charging of refrigerators (2%) (kg)	0.074	0.103	0.117	0.132	0.160	0.189	0.148	0.177	0.222	0.272	0.322	0.379	0.431	0.480	0.511	0.546	0.580
HFC-134a leakage during charging of	0.00189	0.00262	0.00326	0.00397	0.00522	0.00659	0.00548	0.00877	0.01366	0.01991	0.02724	0.03614	0.03908	0.04123	0.04149	0.04172	0.04433

	1995	1996	1997	1998	1999	2000	2001	2002	2003	2004	2005	2006	2007	2008	2009	2010	2011
freezers (2%) (kg)																	
HFC-134a from charging (t)	7.631E-05	1.058E-04	1.206E-04	1.355E-04	1.656E-04	1.958E-04	1.531E-04	1.857E-04	2.355E-04	2.918E-04	3.496E-04	4.148E-04	4.701E-04	5.210E-04	5.526E-04	5.875E-04	6.242E-04
HFC-134a leakage from stocks in refrigerators containing HFC-134a (1%) (kg)	61.213544	84.84462	96.5185376	108.185761	131.950664	155.607800	182.169302	218.331643	273.729682	335.405703	397.711494	467.167603	531.71434	591.959761	630.60911	673.345322	715.429405
HFC-134a leakage from stocks in freezers containing HFC-134a (1%) (kg)	1.5550785	2.1554061	2.68291823	3.26337306	4.28937144	5.41917714	6.76219005	10.8199752	16.8586507	24.5629016	33.6106026	44.58446	48.2124402	50.8619671	51.1921563	51.4747457	54.6919173
HFC-134a from stock (t)	0.0627686	0.087	0.09920145	0.11144913	0.13624003	0.16102697	0.18893149	0.22915162	0.29058833	0.3599686	0.4313221	0.51175206	0.57992678	0.64282173	0.68180127	0.72482007	0.77012132
HFC-134a leakage after disposal (80%60%) (kg)	NA	NA	NA	NA	NA	NA	NA	NA	NA	NA	NA	NA	NA	NA	NA	NA	NA
HFC-134a leakage after disposal (80%60%) (kg)	NA	NA	NA	NA	NA	NA	NA	NA	NA	NA	NA	NA	NA	NA	NA	NA	NA

Table 2 HFC–134a emission estimation from commercial and industrial refrigeration

	1998	1999	2000	2001	2002	2003	2004	2005	2006	2007	2008	2009	2010	2011
Amount of HFC-134a used in installation of new equipment (t)	0.0800	0.0211	0.1118	0.2330	0.3532	0.5850	0.6639	0.3765	6.8653	4.8303	6.6466	7.0848	8.7729	3.8173
Amount of HFC-134a used for charging (t)	0.0108	0.1420	0.1810	0.2233	0.5878	0.6982	0.3738	0.7360	IE	IE	IE	IE	IE	IE
Amount of gas is manufactured equipment (t)	-	0.03	-	-	0.0202	0.0136	-	-	-	-	-	-	-	-
Total amount of HFC-134a charged (t)	0.0908	0.1931	0.2928	0.4563	0.9612	1.2968	1.0377	1.1125	6.8653	4.8303	6.6466	7.0848	8.7729	3.8173
Leakage from charging (%)	15%	15%	15%	15%	15%	15%	15%	15%	8%	8%	8%	8%	8%	8%
HFC-134a held in stocks (t)	0.0908	0.2231	0.3128	0.7748	1.0352	1.4044	2.1133	2.4695	30.7908	25.9109	43.0996	61.6263	46.6234	17.0610
Leakage from stocks (%)	3.50%	3.50%	3.50%	3.50%	3.50%	3.50%	3.50%	3.50%	1.50%	1.50%	1.50%	1.50%	1.50%	1.50%
HFC-134a emissions from charging (t)	0.0032	0.0068	0.0102	0.0160	0.0336	0.0454	0.0363	0.0389	0.1030	0.0725	0.0997	0.1063	0.1316	0.0573
HFC-134a emissions from stocks (t)	0.0136	0.0335	0.0469	0.1162	0.1553	0.2107	0.3170	0.3704	2.4633	2.0729	3.4480	4.9301	3.7299	1.3649
HFC-134a from disposal	-	-	-	-	-	-	-	NO	NO	NO	NO	NO	NO	NO

Table 3 HFC–32 emission estimation from commercial and industrial refrigeration

	2004	2005	2006	2007	2008	2009	2010	2011
Amount of HFC-32 used in installation of new equipment (t)	-	-	0.4846	1.5818	1.3011	1.6591	2.0065	2.7336
Amount of HFC-32 used for charging (t)	0.046	-	IE	IE	IE	IE	IE	IE
Total amount of HFC-32 charged (t)	0.0460	-	0.4846	1.5818	1.3011	1.6591	2.0065	2.7336
Leakage from charging (%)	15%	15%	8%	8%	8%	8%	8%	8%
HFC-32 held in stocks (t)	0.4837	0.0184	1.1819	2.9121	5.5460	11.6342	6.7596	4.9438
Leakage from stocks (%)	3.50%	3.50%	1.50%	1.50%	1.50%	1.50%	1.50%	1.50%
HFC-32 emissions from charging (t)	0.0016	-	0.0073	0.0237	0.0195	0.0249	0.0301	0.0410
HFC-32 emissions from stocks (t)	0.0726	0.0028	0.0945	0.2330	0.4437	0.9307	0.5408	0.3955
HFC-32 from disposal	-	NO	NO	NO	NO	NO	NO	NO

Table 4 HFC–125 emission estimation from commercial and industrial refrigeration

	2004	2005	2006	2007	2008	2009	2010	2011
Amount of HFC-125 used in installation of new equipment (t)	–	0.0660	8.2509	6.4119	12.1509	14.7358	19.1665	22.5163
Amount of HFC-125 used for charging (t)	0.0931	-	IE	IE	IE	-	-	-
Total amount of HFC-125 charged (t)	0.0931	0.0660	8.2509	6.4119	12.1509	14.7358	19.1665	22.5163
Leakage from charging (%)	15%	15%	8%	8%	8%	8%	8%	8%
HFC-125 held in stocks (t)	0.6247	0.0861	7.2225	21.5748	33.4125	44.3485	35.2342	39.4360
Leakage from stocks (%)	3.50%	3.50%	1.50%	1.50%	1.50%	1.50%	1.50%	1.50%
HFC-125 emissions from charging (t)	0.0033	0.0023	0.1238	0.0962	0.1823	0.2210	0.2875	0.3377
HFC-125 emissions from stocks (t)	0.0937	0.0129	0.5778	1.7260	2.6730	3.5479	2.8187	3.1549
HFC-125 from disposal	-	NO	NO	NO	NO	NO	NO	NO

Table 5 HFC–143 emission estimation from commercial and industrial refrigeration

	2004	2005	2006	2007	2008	2009	2010	2011
Amount of HFC-143 used in installation of new equipment (t)	–	0.0780	9.0183	5.6805	12.5648	13.5303	18.9081	23.1855
Amount of HFC-143 used for charging (t)	0.0510	-	IE	-	IE	IE	IE	IE
Total amount of HFC-143 charged (t)	0.0510	0.0780	9.0183	5.6805	12.5648	13.5303	18.9081	23.1855
Leakage from charging (%)	15%	15%	8%	8%	8%	8%	8%	8%
HFC-143 held in stocks (t)	0.0874	0.0780	6.8324	23.4256	32.0315	24.2838	32.3061	38.4572
Leakage from stocks (%)	3.50%	3.50%	1.50%	1.50%	1.50%	1.50%	1.50%	1.50%
HFC-143 emissions from charging (t)	0.0018	0.0027	0.1353	0.0852	0.1885	0.2030	0.2836	0.3478
HFC-143 emissions from stocks (t)	0.0131	0.0117	0.5466	1.8740	2.5625	1.9427	2.5845	3.0766
HFC-143 from disposal	-	NO	NO	NO	NO	NO	NO	NO

Table 6 HFC–152 emission estimation from commercial and industrial refrigeration

	2006	2007	2008	2009	2010	2011
Amount of HFC-152 used in installation of new equipment (t)	0.012267	-	-	-	-	-
Amount of HFC-152 used for charging (t)	IE	-	-	-	-	-
Leakage from charging (%)	8%	8%	8%	8%	8%	8%
HFC-152 held in stocks (t)	0.1110061	0.0744925	0.0379789	0.0024739	0.000546	0.0017979
Leakage from stocks (%)	1.50%	1.50%	1.50%	1.50%	1.50%	1.50%
HFC-152 emissions from charging (t)	0.0002	-	-	-	-	-
HFC-152 emissions from stocks (t)	0.0089	0.0060	0.0030	0.0002	0.00004	0.00014

Table 7 HFC– 23 emission estimation from commercial and industrial refrigeration

	2008	2009	2010	2011
Amount of HFC-23 used in installation of new equipment (t)	0.0012	-	-	-
Leakage from charging (%)	8%	8%	8%	8%
HFC-23 held in stocks (t)	0.011	0.02336	0.05732	8.39606
Leakage from stocks (%)	1.50%	1.50%	1.50%	1.50%
HFC-23 emissions from charging (t)	0.0000	-	-	-
HFC-23 emissions from stocks (t)	0.0009	0.0019	0.0046	0.6717
HFC-23 from disposal	NO	NO	NO	NO

Table 8 HFC–134a emission estimation from transport refrigeration

	1999	2000	2001	2002	2003	2004	2005	2006	2007	2008
Amount of HFC-134a held in stocks (t)	0.0308	0.0913	0.2898	0.2598	0.3093	0.4580	0.5622	0.5440	IE	IE
Leakage from stocks (%)	15%	15%	15%	15%	15%	15%	15%	8%	8%	8%
Emissions from stocks (t)	0.0046	0.0137	0.0435	0.0390	0.0464	0.0687	0.0843	0.0435	IE	IE

Table 9 HFC–23 emission estimation from transport refrigeration

	1995	1996	1997	1998	1999	2000	2001	2002	2003
Amount of HFC-23 held in stocks (t)	0.1000	0.0240	0.0500	0.1800	0.0900	0.0100	0.0100	0.0200	0.1200
Leakage from stocks (%)	15%	15%	15%	15%	15%	15%	15%	15%	15%
Emissions from stocks (t)	0.0150	0.0036	0.0075	0.0270	0.0135	0.0015	0.0015	0.0030	0.0180

Table 10 HFC–125 emission estimation from transport refrigeration

	2004	2005	2006
Amount of HFC-125 held in stocks (t)	0.0133	0.1704	0.3274
Leakage from stocks (%)	15%	15%	8%
Emissions from stocks (t)	0.0020	0.0256	0.0262

Table 11 HFC – 134a emission estimation from mobile air conditioning equipment

	1995	1996	1997	1998	1999	2000	2001	2002	2003	2004	2005	2006	2007	2008	2009	2010	2011
Passenger cars with manufacturing year >1995	384	5137	9512	16061	23091	30730	41049	55166	73510	103917	151705	230926	324774	371591	376123	392265	403791
Trucks with manufacturing year >1995	35	716	6655	8154	8220	12724	15164	17714	20875	25955	36693	46068	57906	63271	60437	33835	41263
Passenger cars equipped with MACs (%)	20%	20%	20%	20%	20%	20%	23%	26%	29%	31%	33%	35%	36%	38%	39%	41%	42%
Trucks equipped with MACs (%)	50.0 %	50.0%	50.0%	50.0%	50.0%	50.0%	53.3%	56.2%	58.7%	60.9%	62.9%	64.7%	66.4%	67.9%	69.4%	70.7%	71.9%
Passenger cars equipped with MACs (pieces)	77	1027	1902	3212	4618	6146	9578	14448	21090	32124	49930	80203	118210	140967	148059	159644	169382
Trucks equipped with MACs (pieces)	18	358	3327	4077	4110	6362	8087	9954	12252	15810	23084	29820	38448	42984	41922	23921	29688
Amount of HFC-134a in passenger cars (kg)	61	822	1522	2570	3695	4917	7662	11559	16872	25699	39944	64162	94568	112773	118447	127715	135506
Amount of HFC-134a in trucks (kg)	21	430	3993	4892	4932	7634	9705	11944	14702	18972	27701	35784	46137	51581	50306	28705	35625
Total amount of HFC-134a in cars (t)	0.082	1.252	5.515	7.462	8.627	12.551	17.367	23.503	31.575	44.671	67.646	99.947	140.705	164.354	168.753	156.420	171.131
Leakage from stocks (%)	15%	15%	15%	15%	15%	15%	15%	15%	15%	15%	15%	15%	15%	15%	15%	15%	15%
HFC-134a emission from stocks (t)	0.012	0.188	0.827	1.119	1.294	1.883	2.605	3.525	4.736	6.701	10.147	14.992	21.106	24.653	25.313	23.463	25.670
Disposed MACs from passenger cars in year (piece)	6	82	152	257	369	492	766	1156	1687	2570	3994	6416	9457	11277	11845	12771	13551
Disposed MACs from trucks in year (piece)	1	29	266	326	329	509	647	796	980	1265	1847	2386	3076	3439	3354	1914	2375
F-gases remained in one MAC (%)	40%	40%	40%	40%	40%	40%	40%	40%	40%	40%	40%	40%	40%	40%	40%	40%	40%
Remained f-gases in annually disposed MACs (kg)	2.638	40.049	176.471	238.783	276.050	401.638	555.758	752.097	1010.385	1429.463	2164.658	3198.289	4502.569	5259.338	5400.103	5005.430	5476.191
Leakage from disposal (%)	100%	100%	100%	100%	100%	100%	100%	100%	100%	100%	100%	100%	100%	100%	100%	100%	100%
HFC-134a disposal emissions (t)	0.003	0.040	0.176	0.239	0.276	0.402	0.556	0.752	1.010	1.429	2.165	3.198	4.503	5.259	5.400	5.005	5.476

Table 12 Potential f-gases emissions estimation from Refrigerating and Air Conditioning Equipment

Chemicals / GWP	2004	2005	2006	2007	2008	2009	2010	2011
HFC-32 (kg)	2.153	1.357	3.095	6.221	5.375	3.621	3.414	3.764
(Gg CO_2 eqv.) GWP 650	1.39945	0.88205	2.01175	4.04388	3.49375	2.35365	2.21910	2.44660
HFC-125 (kg)	11.737	11.461	18.364	16.757	22.695	24.192	37.553	23.149
(Gg CO_2 eqv.) GWP 2800	32.8636	32.0908	51.41982	46.92015	63.546	67.73620	105.14728	64.81832
HFC-134a (kg)	3.964	3.944	6.837	7.774	8.824	6.949	9.885	5.666
(Gg CO_2 eqv.) GWP 1300	5.1532	5.1272	8.88849	10.10619	11.4712	9.0331	12.8505	7.3658
HFC-143a (kg)	11.046	11.738	17.576	11.64	20.14	22.88	33.12	22.19
(Gg CO_2 eqv.) GWP 3800	41.9748	44.6044	66.7888	44.2301	76.5320	86.944	125.837	84.322
HFC-152 (kg)	0.065	0.221	0.035	0.2055	0.3675	-	-	-
(Gg CO_2 eqv.) GWP 140	0.0091	0.03094	0.004914	0.02877	0.05145	-	-	-
TOTAL (Gg CO_2 eqv.)	81.40015	82.73539	129.11377	105.32908	155.0944	166.06690	246.05388	158.95272

Table 13 Potential f-gases emissions estimation from Foam Blowing

	2003	2004	2005	2006	2007	2008	2009	2010	2011
HFC-134a (t)	24.88	3.9	37.28	178.7	318.5	12.56	0.07	6.469	4.912
HFC-134a (Gg CO_2 eq)	32.35	5.07	48.47	232.3	414.1	16.33	0.091	8.41	6.386
actual emissions during use (t)	**2.488**	**0.39**	**3.728**	**17.87**	**31.85**	**1.256**	**0.007**	**0.647**	**0.491**
HFC-134a	-	-	-	0.058	0.047	-	-	-	-
HFC-134a (Gg CO_2 eq)	-	-	-	0.075	0.061	-	-	-	-
actual emissions during use (t)	**-**	**-**	**-**	**0.006**	**0.005**	**-**	**-**	**-**	**-**
TOTAL HFC-134a	**24.88**	**3.9**	**37.28**	**178.7**	**318.5**	**12.56**	**0.07**	**6.469**	**4.912**
HFC-134a (Gg CO_2 eq)	**32.35**	**5.07**	**48.47**	**232.3**	**414.1**	**16.33**	**0.091**	**8.41**	**6.386**
actual emissions during use (t)	**2.488**	**0.39**	**3.728**	**17.87**	**31.85**	**1.256**	**0.007**	**0.647**	**0.491**
HFC-152	**2.613**	**0.41**	**3.915**	**18.76**	**33.44**	**1.319**	**0.007**	**0.679**	**0.516**
HFC-152 (Gg CO_2 eq)	**0.366**	**0.057**	**0.548**	**2.626**	**4.682**	**0.185**	**0.001**	**0.095**	**0.072**
actual emissions during use (t)	**0.261**	**0.041**	**0.391**	**1.876**	**3.344**	**0.132**	**7E-04**	**0.068**	**0.052**
HFC-227ae (Tecfoam SP-27-B5/365/245)	-	2.9	2.7	2.5	-	-	-	-	-
HFC-227ae (Gg CO_2 eq)	-	8.41	7.83	7.25	-	-	-	-	-

	2003	2004	2005	2006	2007	2008	2009	2010	2011
actual emissions during use (t)	**-**	**0.29**	**0.27**	**0.25**	**-**	**-**	**-**	**-**	**-**
100% HFCs in products (Gg CO_2 eq) – potential emissions	**32.35**	**13.48**	**56.3**	**239.5**	**414**	**16.33**	**0.091**	**8.41**	**6.386**

Table 14 HFC–227ea emission estimation from fire extinguishing equipment

	2001	2002	2003	2004	2005	2006	2007	2008	2009	2010	2011
Amount of HFC-227ea in installed equipment (t)	0.2435	0.2435	0.6085	1.232	0.793	0.2775	0.7635	1.2495	1.7355	2.2215	2.7075
Amount of HFC-227ea held in containers (t)	195.5	195.5	195.5	195.5	195.5	195.5	195.5	195.5	195.5	195.5	195.5
Leakage from installed equipment (%)	5%	5%	5%	5%	5%	5%	5%	5%	5%	5%	5%
Emission from stocks (t)	9.78718	9.78718	9.80543	9.83660	9.81465	9.78888	9.81318	9.83748	9.86178	9.88608	9.91038

Table 15 Potential HFC–227ea emissions estimation from fire extinguishing equipment

	2001	2002	2003	2004	2005	2006	2007	2008	2009	2010	2011
Amount of HFC-227ea in installed equipment (t)	0.2435	0.2435	0.6085	1.232	0.793	0.2775	0.7635	1.2495	1.7355	2.2215	2.7075
Amount of HFC-227ea held in containers (t)	195.5	195.5	195.5	195.5	195.5	195.5	195.5	195.5	195.5	195.5	195.5
Leakage from installed equipment (%)	5%	5%	5%	5%	5%	5%	5%	5%	5%	5%	5%
Emission from stocks (t)	9.78718	9.78718	9.80543	9.83660	9.81465	9.78888	9.81318	9.83748	9.86178	9.88608	9.91038
Total emission from stocks (Gg CO_2 eqv.)	28.38281	28.38281	28.43573	28.52614	28.46249	28.38774	28.4582	28.5287	28.5991	28.6696	28.7401

A.3.4 Agriculture

Distribution of different manure management systems for 2000-2011 is estimated according to studies of Latvia University of Agriculture researchers. The number and detailed explanation of calculation is available in the report *Lauksaimniecības rādītāju prognoze 2015. un 2020. gadam* (Forecast of Agricultural indicators 2015-2020), published in 2011, Riga.

A.3.5. LULUCF

1 LULUCF – Methods utilized to recalculate historical forest increment data

In accordance with Republic of Latvia Cabinet Regulation No 590 Adopted 28 August 2007 „Regulations regarding Forest Inventory and Information Flow in the State Forest Register of Forests" (Issued pursuant to Section 34, Paragraphs two and three and Section 39, Paragraphs three and six of the Law on Forests) "The methodology for the performance of the forest statistical inventory and calculation of secondary parameters of a forest stand" is approved by Minister for Agriculture (vajadzētu pievienotot literatūras sarakstam).

Inventory is performed by The Latvian State Forestry Research Institute „Silava". The Latvian State Forestry Research Institute „Silava" is responsible for the accuracy of the inventory data. Each year by 1 April, the Latvian State Forestry Research Institute „Silava" submits to the Ministry of Agriculture the information obtained during the inventory of the previous year. The content of the submission of the information is determined by the Ministry of Agriculture. The results of the inventory are presented in tables.

„Silava" is ensuring that the inventory data is permanently kept in electronic form in a chronological sequence according to the forest inventory periods.

1.1. Aim and object of forest statistical inventory

The aim of the inventory is to get quick and precise information about forest resources to satisfy needs of national and international statistics, to control dynamics of forest area, to get precise information about structure and dynamics of wood resources, to evaluate effectiveness of usage of resources and forest ecosystem (dynamics of damages and biological diversity) and to accumulate historical information about way of development of forest stands.

The object of forest statistical inventory is the whole territory of the country, which according to the Law of Forests is qualified as land used for growing forests independently to form of ownership. Simultaneously continuous control of the whole land area of the country is performed to ensuring observation of the dynamics of land property and evaluation of naturally or artificially afforested land.

1. 2. Net of sample plots and sampling design

1. 2.1. Overall characteristics of net of sample plots

Forest statistical inventory is based on the method of continuous, combined, multistage sampling and GIS technology.

Forest statistical inventory is done according to three stage selection principle:

1. By using ortofoto maps (1:10 000) in whole territory of Latvia initial inventory units following each other after 250 m are placed to estimate the land use categories in accordance with State land service.

2. Net of permanent and temporary sample plots (hereinafter - SP) is estimated by selecting tracts of permanent SP with 4 SP in each as well as tracts of temporary SP with 8 SP in each:

2.1. The net of permanent SP tracts is placed evenly in whole territory of country in distance 4*4 km from each other in a way that they are making equilateral triangles (picture 1.a.). Each year 1/5 from all permanent SP is measured.

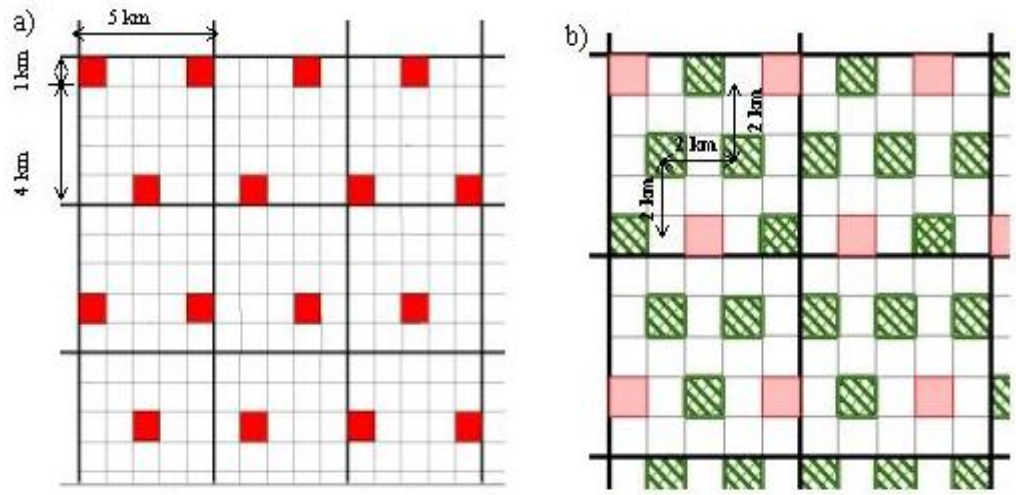

Figure 1 Schema of layout of permanent (a) and temporary SP (b) tracts

Temporary SPs are placed according to 2*2 km net with target to push up confidence level of results (picture 1.b). By quantity temporary SPs are 1/3 from yearly measured permanent SPs. Temporary sample plots are no re-measured.

SP tracts are placed on ortofoto. Permanent SPs are grouped by 4 in one tract. SP in tract are placed in peaks of quadrate 250*250 and centre of SP is moved by 25m from peaks of this quadrate (2.Picture).

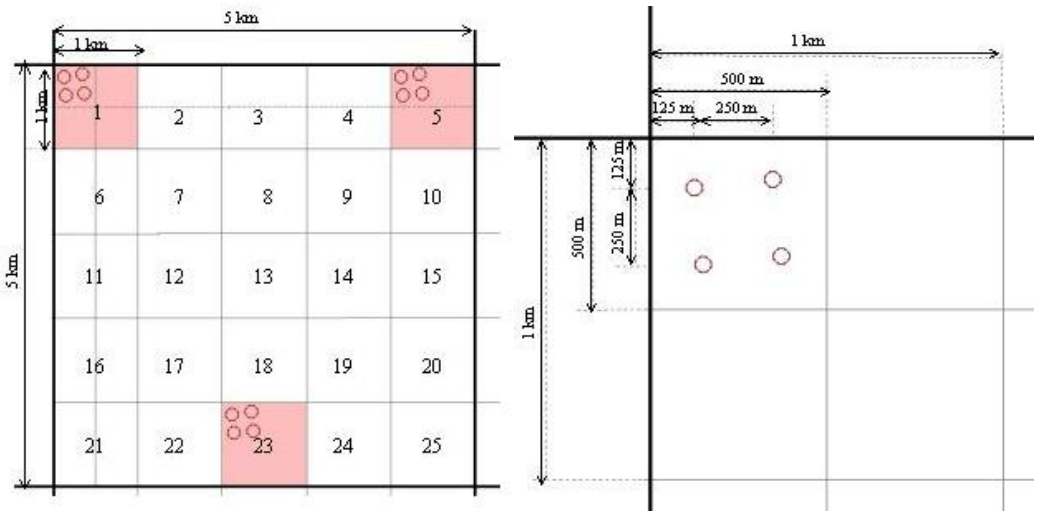

Figure 2 Schema of selecting permanent and temporary sample plots on ortofoto

In all permanent and temporary SPs accounting trees are selected with target to evaluate height, age, increment, quality and damages. These trees are selected in proportion with diameter of existing trees. Intensity of selection is 20-30% form all trees, whose diameters are measured.

Net of permanent SPs is established according to systematic schema of placement with random start. Each SP is measured once in one period of NFI (it means once in 5 years). One permanent plot represents area of 400 ha.

For placement of temporary SPs, random selection in used. By using tables of random numbers, number of 1*1 km quadrant is gradually selected for each tract. From selection of temporary SP tracts 1*1 km quadrants with permanent SPs are excluded as well as temporary SPs from previous years.

Temporary SPs are measured like permanent SPs, but measurement is made only once and without fixing geographical placement of trees. In the same tract, together with SPs for accounting of trees, stump sample plots are placed with aim to deal only with accounting of felled trees. In these SPs (stump) unlike in permanent and temporary SPs other characteristics of forest land is not accounted.

Each temporary plot after one year measurement represents territory of 6000 ha, but during 5 years – 1200 ha. Taking together permanent and temporary SPs, each plot during one year represents 1500ha, but during 5 years 300 ha. By making repeated measurements in permanent SPs changes in 5 years period are evaluated, but taking together permanent and temporary SPs present condition of forest stands is evaluated.

1.2.2. Schema of sample plots.

In net of permanent SPs, plots are placed in tracts whose margins (with length of 250 m) are oriented in direction of north, east, south and west. Centre of SP is moved from peak of tract by 25 m. (3.a. picture)

Temporary SPs are placed in quadrates of 500*500 m and they are divided in two parts - stump SPs, where only stumps are measured and SPs for accounting of trees which are measured like permanent SPs, but without fixation of placement of trees.

In tracts of temporary SPs plots for accounting of trees are placed in corners of 500*500 m quadrate, but stump SPs - in midpoints of quadrate margins. SPs are moved aside by 25 m in opposite to direction of movement. (3.b picture).

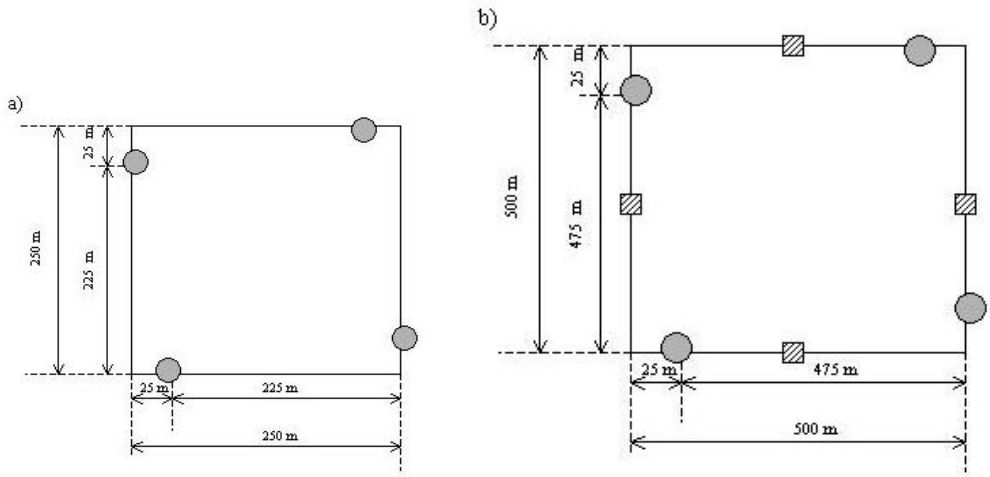

Figure 3 Schema of placement of permanent sample plots (a) and temporary sample plots (b)

Main element of measurements is permanent SP with fixed radius, with square of 500 m2 (R = 12.62 m), where measurements of trees with diameter >= 14.1 cm at 1.3 m height above root collar, stumps with diameter >= 14.1 cm at root collar and dead wood are done (4.Picture).

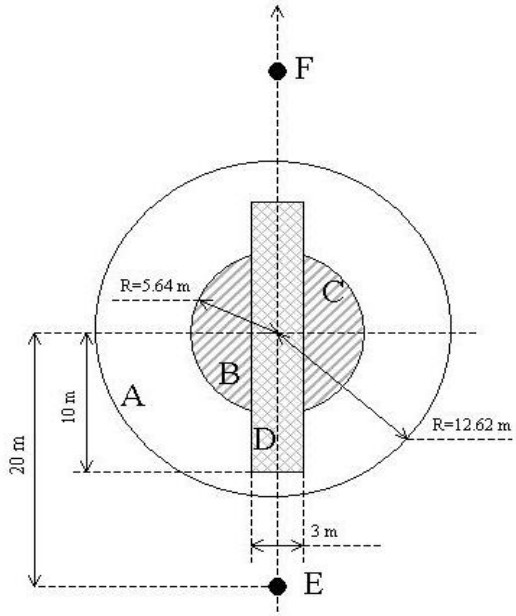

Figure 4 SP schema (A – 500 m^2 SP, B – 100 m^2 SP, C – 25 m^2 SP, D – SP for Understorey and brushwood , E and F – SP for measurements outside the permanent SP (used for radial increment measurement with boring method)

In the centre of SP another circular sample plot is singled out (B) - 100 m^2 (R=5.64 m), where all trees, stumps and deadwood with diameter >= 6.1 cm are measured. In the first ¼ of this SP (accounting from north direction) in 25 m2 (C) all naturally growing saplings and shoots with diameter >=2.1 cm in height of 1.3 m above the root collar and stumps with diameter >=2.1 cm at root collar are measured.

Understorey and brushwood are taken into account in a 3*20 m strip-like plot allocated within the main plot. For 1. and 3. SPs - in E-W direction, for 2. and 4. SPs - in N-S direction.

1.2.3. Dividing sample plots in sectors.

Sample plots occurring on the boundaries of several forest compartments are divided into smaller units – sectors. Each singled out sector is described separately, with trees being measured as in a separate sampling unit. The sample plots are divided in sectors, if there is different property form, land use, forest land category, origin of stand, forest site type, main species; age differences exceed 20 years, stocking level of the main storey differs by 0.3 or more.

During identifying sectors of SP, azimuths and distances till centre of SP for those points, where sectors making line crossing border of SP, is fixed. (5.picture)

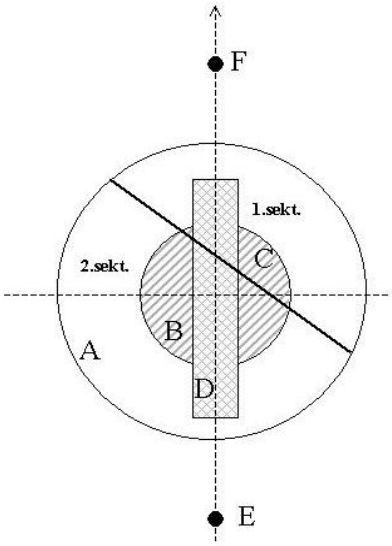

Figure 5 Sample plot dividing in sectors – schematic picture

1.2.4. Numbering of tracts and sample plots

Sample plots within tracts are numbered from „1" to „8" clockwise. (6. b Picture).

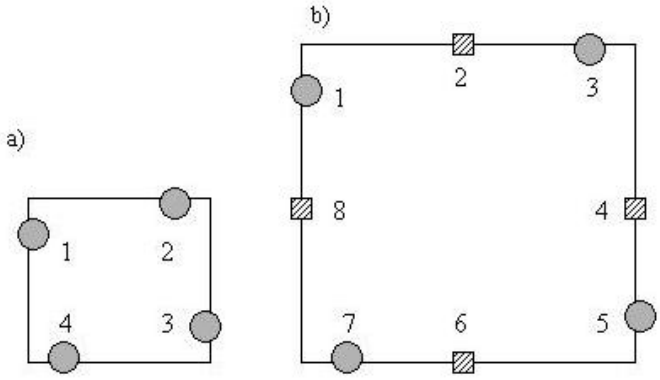

Figure 6 Schema of numbering permanent sample plots (a) and temporary sample plots (b)

1.2.5. Determination of coordinates of tracts and sample plot centres

According to Latvian system of coordinates, ortofoto maps and schema shown in 1.Picture coordinates of permanent SP tract centres are calculated. On the 5*5 km sheet of ortofoto map in the middle of territory of Latvia permanent SPs tracts are placed in centres of three 1*1 km quadrates (7.Picture). Starting from three sample plot tracts in the central ortofoto sheet of Latvia to the north, east, south and west directions coordinates of next centres of tracts are calculated in distance 4 km for all inland territory of Latvia. Coordinates of each next tract centre are calculated using coordinates of neighbour tract centre.

Coordinates of sample plot centres are calculated following coordinates of tract centres taking into account principle that centre of tract is centre of 250*250 m quadrate in whose corners sample plots are placed. Additionally displacement of sample plot centre from corners of quadrate by 25 m is calculated (3.Picture).

Coordinates of centres of temporary sample plot tracts are calculated analogically taking into account distance of 2*2 km between sample plot tracts and placement of sample plots in corners of quadrate 500*500 m and midpoints of margins (3.Picture).

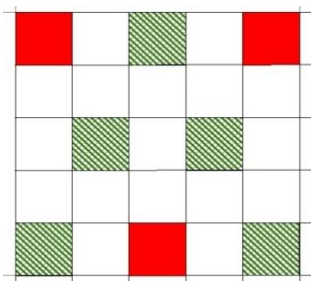

Figure 7 Schema of placement of permanent and temporary sample plots in central 5*5km ortofoto sheet of Latvia

1.3. Organisation of forest statistical inventory

1.3.1. Periodicity of forest inventory

Forest statistical inventory is performed each year in whole territory of Latvia. During first 5 years number of permanent SPs is gradually growing - each year 1/5 form overall count of SPs is measured.

After each 5 years according to cartographic materials - ortofoto and satellite pictures – changes in forest area distribution by land use categories are fixed. Re-measurements of permanent SPs are done during each next 5 years. Time period between re-measurements of permanent sample plots is 5 years +/- 20 days.

Temporary SPs each year are established in new places and measurements are done once – temporary SPs are not measured repeatedly.

1.3.2. Preparatory work of forest inventory

Preparatory work ensures timely and successful start and progress of field work. Preparatory work is done in period December - April, until beginning of field work.

By using ortofoto maps (not older than 5 years) according to calculated coordinates of tracts and SPs is fixed following information – either SPs of tracts is in forest or not as well as if they touches to separate trees or groups of trees. As a result there is prepared list about those SPs, which has to be measured or inspected – to get precise information if SP is in forest land or touches separate trees. SPs in other land use categories (except forest) are inspected as well.

Following documentation is prepared - printouts of ortofoto maps (S 1:10000), copies of forest land maps (S 1:10000) and maps of land cadastre, printouts of satellite images (S 1:50000).

Preparatory work includes also preparing measuring instruments for field work.

1.3.3. Organisation of field work

Measurements in SPs are done by at least 5 field work field work groups. Field work group consists from group leader and 2 technical workers. Group leader organises work of field group, trips, chooses the routs of visiting tracts, organises detection of tracts and measurements in SPs, takes responsibility about all documentation, training of group workers and compliance with methodology as well as taking care about transport and storage and verification of measuring instruments.

1.3.4. Quality assurance of field work

Field work is controlled with aim to prevent mistakes of measurements and the causes of these mistakes. Not less than 5 % from SPs measured by each field group are checked. Quality control is done by separate control group which consists from 3 specialists.

During field work control is done regarding all those parameters which are re-measured repeatedly in next cycles (azimuth of trees, distance, diameter, and height). Random control is placed also on parameters which are not going to be re-measured (width of growth rings, present deadwood and stumps). Control is performed each year in permanent sample plots.

1.4. Measurements and data registration

1.4.1. Identification of sample plots

For allocation of SP centre GPS receivers are used accordingly to calculated coordinates in navigation regime. In case it is not possible to found centre of SP with GPS receiver (low ability of data receiving in forest environment), coordinates of centre are found in nearest open area as well as distance and azimuth where to go to identify the point. The centre of SP in this case is found by using measuring-tape and compass. SP centre detection is fixed in documents.

After inspection all sample plots and their parts are divided in accessible and inaccessible. Sample plot is considered as inaccessible if it is not possible to reach its centre because of different reasons – centre is in water reservoirs, bogs etc. Situation is fixed in SP description.

Measurements for inaccessible SPs are done outside SP in plots whose centre are placed as close as possible to theoretical centre of SP. In this case a location of centre of plot, used for measurements, is described in SP description and nearest trees is marked.

If SP is accessible, but its centre matches with some natural barrier (stone, asphalt etc.), the centre of SP is marked at closest possible distance from theoretical centre (nearest trees are marked), but measurements are done from theoretical centre. The same methodology is used if centre of SP falls in places where destruction of centre is very possible (cropland or object of forest infrastructure). Changes are fixed in documents and design of marked centre is depictured.

Established permanent SPs in time period until next measurements should be as less visible as possible. The centre of SP is marked invisible with iron pole under surface of soil and nails (with diameter of head of a nail at least 0,7mm) in roots of nearest trees after measurements are done. If it is not possible to mark SP centre using trees or stumps in SP (for example in coppice), then trees outside SP are found but not further than 20 m from centre of SP. If proper trees are located further than 20 m, they are not marked. Identification of SP centre is documented by indicating species, distance to centre of SP and azimuth of marked trees.

During re-measurements of permanent SPs, centres are found with metal detector – seeking for iron pole and marked trees. If iron marks are destroyed, then GPS ore distance measurer is used.

For detection of sample plots in nature the same methodology is used for permanent and temporary sample plots.

1.4.2. Sample trees outside the sample plot

Sample trees for detection of age and increment in permanent sample plots are selected outside the permanent sample plot, but for temporary sample plots these measurements are done within the sample plot. Sample trees outside the sample plots are chosen following principle that these trees according to dimensions should fit to average tree in sample plot and are located in the same forest stand where sample plot is.

Outside of SP the age of growing trees is estimated (+/- 1 year) by boring method in 1.3 m height from roots collar. Diameter in 1.3 m from roots collar and tree species are

estimated for sample trees as well. If trees of corresponding species in SP is more than 40%, age is measured for 3 trees, if less than 40% - for 1 tree. Age is fixed also in breakdown by stand stories.

For increment estimation measurements of growth rings of sample trees are done in forest, but data are fixed in inventory card. Increment is estimated for not more than10 borings and growth rings are measured for last 2 five-years.

All data gathered in field work are registered in tables for data accumulation, but initially inventory card of tract is completed.

*1.4.3. Estimation of forest site typ*e

Forest site types are defined by ascertaining mean height of tree species, woody vegetation and the presence of characteristic grassy vegetation as well as the intensity of draining is considered. For each forest sample plot or its sector forest site type is assessed by using Latvian typology of forest by K. Bušs (Bušs K. 1981. Meža tipoloģija un ekoloģija. Riga).

1.4.4. Estimation of understorey and brushwood

Understorey and brushwood is assessed in all forest lands (except lands under objects of forest infrastructure) as well as in lands outside forest land if this area is in sector and starts to cover with forest or brushes.

As understorey are fixed trees of forest element which in height of 1.3 m have not reached 2.1 cm diameter. If forest element with diameter less than 2.1 cm is making dominant stand then trees are not accounted as understorey. Artificially planted trees are not accounted as understorey.

Understorey and brushwood is accessed in strip with 20 m length and 3m width (4. Picture, strip-like plot D). In case of sectors this area may be smaller or to stay away at all – it is fixed in description of sector.

For trees of understorey and brushwood - species, number of individuals, height and diameter in the mid of middle shoot is accessed.

According to quality individuals of understorey and brushwood are sorted in healthy and perspective or damaged and prospect less. Trees are accounted as healthy if they are well grown, but with small damages (animal damages less than 30%, bark is not damaged).

For each tree species of understorey and brushwood average age is assessed – by counting whorls or growth rings for tree felled down outside of sample plot. During assessment of brushwood all shoots are accounted.

1.4.5. Measurements of trees

1.4.5.1. Choosing of sample trees

Sample trees are chosen from living trees (whom measurements of diameter in 1,3 m height are done) in sample plot. If certain forest element is formed only by dead trees, sample trees are measured from them. In general not less than 1 tree from seven should be selected. For selecting of sample trees third, 10th and 17th and so on tree is selected. Sample trees are selected accordingly to species composition in stand - incase of stand with several tree species and stories – more sample trees are selected. If it is not possible to gather appropriate number of sample trees systematically – missing trees are selected from trees with larger dimensions.

Sample trees are selected in temporary as well as in permanent sample plots. For chosen sample trees additional measurements are done - measurements of diameter at root collar, height of tree, height of first green branch, height of first dry branch, evaluation of defoliation.

Trees are not bored in permanent sample plots. Number of growth rings and increment is assessed outside of sample plot. During re-measuring of permanent sample plots the same sample trees are measured. If sample trees are felled down or shriveled up systematically next sample tree is selected.

1.4.5.2. Estimation of tree distance to centre of sample plot

Distance from centre of sample plot to centre of tree in height of 1.3 m is measured with ultrasound device. In permanent sample plots distance is measured for each tree, in temporary sample plots only for border trees to identify is it in the sample plot or outside. For distance measurements in the centre of sample plot is set up rack to which ultrasound device reflector is fastened. Ultrasound source with indicator of measurements is placed in horizontal position against reflector at central axis of tree.

In card of inventory of trees only distance of living trees to centre of sample plot is fixed. Distances for fallen trees and stumps are measured only to detect their belonging to sample plot.

1.4.5.3. Estimation of azimuth

From centre of sample plot with compass, which is fixed on rack, azimuths of trees are measured with precision of 1°. Azimuth is fixed as indication from instrument without taking into account magnetic declination. Azimuth is measured only for living and standing dead trees, but not for stumps and lying trees. Measuring of trees starts from magnetic north and movement is clockwise. Azimuth is determined against magnetic north.

Distance to tree is measured in height of 1,3 m against axis of tree (1/2 form diameter). If tree is situated in slope, distance is measured parallel surface of land at height of 1.3 m and distance is recalculated taking into account angle of land surface. If, because of inconvenient visibility of tree (measurements are interfered by projection of stem of other tree), measurement of azimuth or diameter is not possible precisely in height of 1.3 m, cause of possible mistake is fixed in trees inventory card.

1.4.5.4. Estimation of parameters of tree stems

In each sample plot measurements of trees and stumps are done.

For each tree following measurements are done and fixed in inventory card - distance of tree to the centre of sample plot (+/- 1 cm), azimuth of tree (+/-1°), tree species, stand storey, Kraft class, diameter in height of 1,3 m (+/- 1 mm), for sample trees root collar diameter (+/- 1 mm), for sample trees height of tree (+/- 0.5 m), height of first living and first dry branch (+/- 0.5 m), damages (type, intensity, height (placement on tree stem) of damage).

For stumps following measurements are done and fixed in inventory card – diameter (specifying with or without bark) (+/-1 mm), root collar diameter (+/-1 mm), height above root collar (+/-1 cm), species.

For evaluating deadwood following measurements are done and fixed in inventory card – species, length (+/- 0.5 m), diameter at thin end (+/- 1 mm), diameter at butt end (+/- 1 mm), quality group, position (standing or lying deadwood)

1.4.5.5. Estimation of tree storey

In permanent sample plots as well as in temporary sample plots for each tree, whose diameter is measured, belonging to first or second storey of stand is assessed.

In first storey goes trees with a height difference which, when compared to the average height of trees, does not exceed 20 %. The second storey is identified separately if the average height of trees thereof is not less than one quarter of the average height of trees of the first storey of the forest stand.

1.4.5.6. Estimation of Kraft class

According to Kraft biological classes (grouping of trees that characterize tree accordingly to its position in forest stand) for each tree of first storey in permanent and temporary sample plots (whose diameter is measured) Kraft class is assessed. Kraft classes are accessed following such principles –

I. Class – trees with largest height and diameters and well developed crown. Tops of these trees are above average crown coverage of stand.

II. Class – trees that forms main crown coverage of stand. Stems have a bit smaller dimensions as trees in I. class. II. Class trees are bout 20-40% form total number of trees in stand, but growing stock is 40-70% total growing stock of stand.

III. Class – trees with relatively smaller crowns - squashed into crowns of trees of I. and II. Class. Crowns are in the lower layer of main crown coverage.

IV. Class – trees with shorter and narrower crowns to compare with trees in III. Class. Crown tops touches lower layer of main crown coverage of stand. Trees have considerably smaller dimensions than trees in I. – III. Class.

V. Class – trees with mortifying or already dead crowns that are under main crown layer of stand.

1.4.5.7. Estimation of diameters of trees

For all trees in sample plot, that has reached 2.1 cm diameter in height of 1.3 m, diameter measurements are done in 1.3 m height with accuracy of 0.1 cm. For sample trees root collar diameter is also measured. The place of diameter measurements on stems is not marked.

During re-measurements diameter of trees has to be measured in the same place. Following prescriptions are considered:

- Place of tree diameter measurement at 1.3 m height is identified using a 1.3 m long ruler. If trees branching out lower than in 1.3 m height, diameters of two trees are measured. If there is scar or outgrowth in 1.3 m, diameter is measured above and below this point and recalculations of middle value made;
- If tree has not reached 2.1 cm diameter at 1.3 m height, diameter is not measured;
- If tree is situated at the border of sample plot, then diameter is measured at 1.3 m height above root collar;
- If vertical axis of tree is in sample plot, then tree is measured, if outside border of sample plot – diameter is not measured;
- For sample trees root collar diameter is measured in direction, where diameter is least;
- Living trees diameters at the 1.3 m height and at root collar are measured with bark. If trees are without bark, the diameters are measured without bark and respective remarks are made;
- Diameters of stumps are measured only in temporary sample plots, but in permanent sample plots during first time of survey.

1.4.5.8. Estimation of height of trees

Height is measured only for sample trees. Total height of tree, height of first living branch and height of first dry branch (diameter at least 2 cm) is measured. Accuracy of height measurements is 0.5 m.

Height is measured from place from which top of tree is well observable. In case tree is growing slantwise, distance for height measurements is determined from place, which is situated on the surface perpendicularly to top of tree. Height is measured from place against which slope of tree is directed. In general if it is possible to choose appropriate sample tree, height of slantwise tree is not measured.

Height of beginning of crown is measured analogically. Crown beginning is detected taking into account first living branches.

1.4.5.9. Estimation of increment and age

Radial increment with boring method is assessed for those forest elements whose middle diameter exceeds 10 cm.

If middle diameter is less than 10 cm, annual increment is assessed by dividing growing stock of forest element with age. For this reason outside of sample plot in 1.3 m height is felled tree (with average dimensions) whose growth rings are counted.

If middle diameter of forest element exceeds 10 cm, age is determined as follows:

- selects trees for age detection;
- if growing stock of forest element in stand exceeds 40%, 2 trees are bored for age detection. If age difference exceeds 15 years, third tree is bored;
- if growing stock of forest element in stand is less than 40%, 1 by eye chosen middle tree is bored;
- age is detected for all forest elements.

For increment detection additional trees (to those whose age is detected) are bored. Increment is accessed about last 5 and 10 years. Last growth ring is not measured. For increment detection at least 3 trees are bored. Bored trees should represent different groups of diameter. In general increment is accessed for 1-2 thinnest, 1-2 largest and 2-3 middle trees of stand (including trees that are bored for age detection).

Borings for increment detection are always made in thickest place of bark. If it is possible borings for increment detection are not made for eccentric trees. If boring should be made in trees that are damaged by animals, boring is made in opposite side of stem.

During detection of increment in forest, widths of last 5 and 10 years growth rings is fixed (for coniferous, oak and ash with 0,1 mm, for other tree species with 0,5 mm accuracy), as well as bark thickness to growth ring of current year. During age detection additionally thickness of wood part from bark to beginning of rot is accessed.

1.4.5.10. Estimation of damages

Remark about damages is made for each tree in sample plot.

Defoliation and dehromation is accessed only for sample trees and only for coniferous. Defoliation is fixed if it reaches 20%. Loss of needles is evaluated by comparing with normal. Needle losses are estimated for whole crown (from beginning to top). Distance for evaluation of defoliation is chosen close to height of tree. During evaluation of defoliation form of crown, development, embranchment etc. is taken into account.

For damaged tree type of damage, intensity and placement is fixed. Following damages are reported – pest damages, disease damages, wild animal damages, fire damages, windfall (snow-thrown wood) and damages by other abiotic factors, damages with other causes.

Intensity of damage is estimated as follows:

- stem damages – width of damage (%) form perimeter of tree;
- damaged shoots, buds, needles, leaves – damaged percentage from total;
- defoliation – amount of needles (%);
- dehromation - amount of needles and leaves (%).

Placement of damage is registered as part of tree where damage is fixed. Following placements of damages are fixed:

- roots and stumps along 30 cm above root collar;
- lower part of stem from stump height to first living branch;
- whole stem from stump height to top;
- upper part of stem from first living branch to top;
- top;
- branches in living crown;
- branches growing from the stem with diameter more then 2 cm;
- buds and shoots;
- needles and leaves.

If tree has more than one type of damage, damage more closely to root collar is fixed.

1.4.5.11. Measurements of deadwood

During measurements of deadwood species, position (standing or lying) and diameter (in thin end and butt-end) is detected.

If lying deadwood has stem with stump, diameter of butt-end is measured at 1.3 m distance from root collar, but thin end is assumed - 1 cm.

If lying deadwood is tree top, diameter of butt-end is measured at break place, but thin end is assumed - 1 cm.

If lying deadwood is broken part of stem, diameters are measured at both ends.

For standing deadwood diameter is measured at 1.3 m height and at the end of standing deadwood. If near is found lying deadwood, what had been part of standing deadwood, diameter of thin end of standing deadwood is assumed as butt-end of this lying deadwood.

If standing deadwood is shorter than 1.3 m, butt-end of standing deadwood is measured at the root collar.

If it is not possible to measure diameter of thin end directly, it is detected accordingly to height of standing deadwood.

Newly felled timber, hauling roads, felled as well as shorter than 0.5 m broken stumps are not recorded as deadwood.

Lying deadwood is measured if diameter of butt-end exceeds 6.1 cm. Belonging of lying deadwood to sample plot A or B is detected accordingly to butt-end location inside or outside of sample plot. If butt-end is located in sample plot, all length of lying deadwood is measured (also if part of lying deadwood is located outside of sample plot). If butt-end of lying deadwood is situated outside of sample plot, deadwood is not measured.

Lying deadwood is measured by degree of decomposition:

- fresh deadwood – until the beginning of bark peeling;
- old deadwood – from the beginning of bark peeling until the beginning of dissemination of epiphyte mosses (less than 10% from visible part of stem surface);

- rotten wood - dissemination of epiphyte mosses more than 10% from visible part of stem surface.

1.4.5.12. Measurements of stumps

Stumps are measured in permanent and temporary sample plots if they are younger than 5 years. Diameters of stumps are measured only in temporary sample plots and in permanent sample plots if they are measured for first time.

Remark is made if stump is measured with or without bark. Diameter is measured for stump and at root collar of felled tree. Height of stump above root collar is also detected. Information about stump measurements is fixed separately for each sector.

1.4.6. Data registration and storage

Data gathered during sample plot measurements initially are registered in working tables or in field computers.

Data from field computers are transferred to data basis not rare than once in two weeks. After logical control found mistakes are sent back to the measurement groups for correction. Finally checked data comprise primary database. Primary data are stored according to the measurement year and full cycle of five years. A permanent database gives possibility to supplement it with new parameters any time.

Information summarized during preparatory work and cartographic materials are stored in printouts until next measurements, when they as possible are renewed with new data.

1.5. Calculation of secondary parameters of a forest stands

Calculations of secondary parameters of a forest stand are done during cameral work of forest statistical inventory in accordance with standard algorithms for estimation of all stand characteristics in a sample plot.

2. The determination of 1990 land use category in areas at 2006 described as forests

In cartographical material for Latvian NFI, the data of sample plots are prepared in digital shape file format accordingly to Latvian coordinate system LKS-92.

It is possible to make spatial comparison of NFI sample plots with all other digital map layers in appropriate coordinate system. In such way as background materials digital raster data - ortophoto maps – are used now.

To assess the historical land cover information of NFI sample plots, they will be compared to LANDSAT satellite images of Latvia's territory, screened at 1990, preparing them at coordinate system LKS 92.

The assessment of NFI sample plots land use on satellite images is possible visually, or using remote sensing programs, in such way producing the layer of 1990 and 2006 forest in digital shape format.

3. The methods of forest resources assessment in NFI's sample plots at 1990

3.1. The methods of growing stock and annual increment assessment for stands more than 17 years old (at present)

3.1.1 General principles

The growing stock and annual increment are assessed for separate forest element (stands part of one species and storey trees). The total growing stock and annual increment of forest stand is assessed as the sum of all forest element values.

In accordance with Latvian NFI methods for the assessment of growing stock it is necessary to get information about:

- average diameter of forest element;
- number of trees of forest element;
- average height of forest element.

Basal area of forest element is calculated, using values of average diameter and number of trees

Growing stock is calculating, using values of basal area and average height.

Additionally, annual increment can be calculated, using value of average width of growth ring.

3.1.2. The estimation of forest element average diameter at 1990

At this moment we have information about:

a. the average diameter of forest element at 2006
b. The average width of growth rings at the period of 2002-2006 and 1997-2001.
c. the average thickness of bark.

For the estimation of average diameter at 1990 it is necessary to take of from average diameter at 2006:

a. the width of growth rings from 1997 (measured in field works of NFI)
b. the width of growth rings Z_5 from 1991 to 1996 what means one period of five years and one single year
c. the thickness of bark produced during last 16 years.

To estimate width of growth rings produced from 1991 it is possible to use the assumption that the width of growth rings at previous period of five years differs from the width of current period of five years in the same proportion as the current width of rings differs from the next period of five years, or if the width of growth rings at 1997_2001 is less than at 2002_2006, the proportion is estimated and the width of rings at 1992_1996 is calculated:

Example: $Z_5$2002-2006=7mm, $Z_5$1997_2001=6mm, $Z_5$1992-1996=$Z_5$1997_2001/ (Z_5 2002_2006 / V 1997_2001) or 6/(7/6)= 5,143

- if the width of growth rings at 1997_2001 is more than at 2002_2006, the calculation is done inversely;
- if the width of growth rings at 1997_2001 is equal than at 2002_2006, the width of growth rings at $Z_5$1992-1996 is assumed the same.
- Having value of width of 5 growth rings Z_5 at 1992_1996, it is easy to calculate width of one ring and is possible to accept that it is the same also at 1991.
- It is assumed that the annual increment of bark thickness is equal to result acquired by dividing the thickness of bark by the age of tree.

Example of total calculation:

measurements of NFI:

year 2006: age – 50 years; averageD =27 cm; Z_5 2002-2006 = 9mm, $Z_5$1997_2001=12 mm;

bark - 6 mm

parameters to be calculated:

$Z_5$1992-1996= 12*12/9=16mm

One annual ring $Z_1$1992-199616/5=3,2 mm

annual increment of bark 6/50=0,12 mm

calculation:

$D_{1990} = D_{2006}$-2* $Z_5$2002_2006-2*$Z_5$1997_2001-2*$Z_5$1992_1996-2*Z11991-2* bark incr. =

=2700-2*9-2*12-2*16-2*3,2-16*0,12= 18,77 cm.

3.1.3. The estimation of forest element average height at 1991

Having value of tree diameter, it is possible to use equation for calculation average height depending from the diameter of tree and forest site index. The equation is produced by using tables of tree growing progress accepted in Latvia's forest inventory. Site index for each sample plot is calculated accordingly to methodology of Latvian NFI, depending from the tree height at the definite age and don't change in the result of forest growing.

Table1. Algorithms for tree height calculation depending from site index and diameter at the breast height

Site index	Species	Height
Ia	pine	
I	pine	
II	pine	
III	pine	
Lower than III	pine	
all	spruce	
all	deciduous	

3.1.4. The estimation of number of trees at 1990 in the sample plot

If the thinnings are not done in forest, the number of trees at 2006 may differ from the number of trees at 1900 as a result of natural mortality. It is identified theoretically that annual natural mortality in Latvia's forest is approximately 4 mill m^3 per year or 0.6 % of the total growing stock of living trees. It is possible to consider, that the number of trees at NFI sample plots at 1990 was more than 9.6% than at 2006.

As the thinnings are done, it is the expert's opinion, that 50% of dead trees are felled at thinnings. In such way the impact of natural mortality to decrease number of trees since 1990 can be assumed as a half of theoretically calculated – 4.8%.

In the field jobs of NFI the stumps are registered and measured if their age don't exceed 5 years. In this case it is possible to calculate the average number of cutted trees during the last period of five years.

By using official data of the forest statistics, it is possible to have data about felled volume in thinings in tree periods of five years: 1992-1996, 1997-2001; 2002-2006 in three groups of forests: pine, spruce and deciduous stands.

Using previous information, it is possible to estimate the proportion of felled volumes.

Accepting as basis of evaluation, that the proportion of felled volumes is similar to proportion of number of felled trees, the number of felled trees in previous two periods of five years and average annual volume will be calculated.

As a result of calculations the number of felled trees per period 1990 – 2006 will be clarified.

Counting the measured living trees and calculated dead and felled trees in sample plot, the number of trees in NFI sample plots at 1900 will be clarified.

3.1.5. The estimation of basal area at 1991 in the sample plot

Using data calculated previously (average diameter $D_{vid.}$, number of trees N), is possible to calculate basal area of forest element:

$$G=PI()*D_{vid}.^2/4*N.$$

3.1.6. The estimation of growing stock at 1991 in the sample plot

Using data calculated previously (average diameter $D_{vid.}$, average height of forest element H_{vid}., basal area of forest element G), it is possible to calculate growing stock of forest element at 1990 in accordance with NFI methods.

The sum of forest element's growing stock forms the total growing stock of forest land at 1990.

3.1.7. The estimation of annual increment at 1991 in the sample plot

Using data calculated previously (average diameter $D_{vid.}$, average height of forest element H_{vid}., basal area of forest element G, average growth ring Z_{1990}, is possible to calculate annual increment of forest element at 1990 in accordance with NFI methods.

The sum of forest element's annual increment forms the total annual increment of forest land at 1990

3.2. The methods of growing stock and annual increment assessment for stands less than 17 years old (at 2006)

There were not strictly defined regulations for forest regeneration depending from the previous stand structure use in practical forestry after 1990. Therefore general assumptions must be used to identify stand structure at 1990 for the areas with less than 17 year old forests at 2006.

In Latvia national forest typology (ecosystem classification) is used to characterise forest ecosystems. Typology identifies 23 forest ecosystem types. The main variables used in forest type identification (vegetation, growing conditions, process of forest regeneration and growing) are not changing in process of new stand establishing after forest cutting, and are the same for the new forest.

In the field jobs every NFI sample plot is characterised by forest type, and it is possible to produce the list of forest types for all areas felled since 1990 and regenerated till 2006.

It is possible to assume that the division of felled areas (since 1990) by forest types is similar that division of matured stands at 1990. For this reason it is possible to characterise felled areas using the average values of growing stock and increment from the group of all matured stands at 1990 calculated by us previously.

The identical approach will be used to characterise cutovers described at 2006.

3.2.1. The software of calculations

After the methods of calculation will be approved by customers, the additional software module of Latvian NFI will be produced, preparing reports about forest growing stock and annual increment separately by main species and age groups of ten years, applying to forest situation at 1990.

ANNEX 4: CO_2 REFERENCE APPROACH AND COMPARISON WITH SECTORAL APPROACH, LATVIA'S ENERGY BALANCE

Table 1 Reference Approach estimations (Table 1B)

FUEL TYPES			Unit	Production	Imports	Exports	International bunkers	Stock change	Apparent consumption	Conversion factor (TJ/Unit)	NCV / GCV (1)	Apparent consumption (TJ)	Carbon emission factor (t C/TJ)	Carbon content (Gg C)	Carbon stored (Gg C)	Net carbon emissions (Gg C)	Fraction of carbon oxidized	Actual CO_2 emissions (Gg CO_2)
Liquid Fossil	Primary Fuels	Crude Oil	TJ	NO	NO	NO		NO	NO	NO	NCV	NO	NO	NO	NO	NO	NO	NO
		Orimulsion	TJ	NO	NO	NO		NO	NO	NO	NCV	NO	NO	NO	NO	NO	NO	NO
		Natural Gas Liquids	TJ	NO	NO	NO		NO	NO	NO	NCV	NO	NO	NO	NO	NO	NO	NO
	Secondary Fuels	Gasoline	TJ		11,300.29	219.85	NO	43.97	11,036.47	1.00	NCV	11,036.47	18.91	208.66	NO	208.66	0.99	757.42
		Jet Kerosene	TJ		9,290.15	7,172.86	4,925.94	1,253.09	-4,061.74	1.00	NCV	-4,061.74	19.71	-80.07	NO	-80.07	0.99	-290.65
		Other Kerosene	TJ		4,320.00	43.20	NO	216.00	4,060.80	1.00	NCV	4,060.80	19.71	80.04	NO	80.04	0.99	290.55
		Shale Oil	TJ		157.40	118.05		-39.35	78.70	1.00	NCV	78.70	21.05	1.66	NO	1.66	0.99	6.01
		Gas / Diesel Oil	TJ		39,388.23	6,840.89	3,186.75	552.37	28,808.22	1.00	NCV	28,808.22	20.40	587.69	NO	587.69	0.99	2,133.32
		Residual Fuel Oil	TJ		6,455.40	NO	5,805.80	-81.20	730.80	1.00	NCV	730.80	21.11	15.43	NO	15.43	0.99	56.01
		Liquefied Petroleum Gas (LPG)	TJ		6,330.06	3,870.90		45.54	2,413.62	1.00	NCV	2,413.62	17.13	41.33	NO	41.33	1.00	151.56
		Ethane	TJ		NO	NO		NO	NO	NO	NCV	NO	NO	NO	NO	NO	NO	NO
		Naphtha	TJ		NO	NO		NO	NO	NO	NCV	NO	NO	NO	NO	NO	NO	NO
		Bitumen	TJ		2,846.48	NO		-83.72	2,930.20	1.00	NCV	2,930.20	22.00	64.46	64.46	0.00	0.99	0.00
		Lubricants	TJ		2,176.72	1,339.52	NO	41.86	795.34	1.00	NCV	795.34	20.01	15.92	7.83	8.09	0.99	29.37
		Petroleum Coke	TJ		65.96	NO		NO	65.96	1.00	NCV	65.96	27.50	1.81	NO	1.81	0.99	6.58
		Refinery Feedstocks	TJ		NO	NO		NO	NO	NO	NCV	NO	NO	NO	NO	NO	NO	NO
		Other Oil	TJ		125.58	125.58		NO	NO	1.00	NCV	NO	22.10	NO	NO	NO	0.99	NO
Other Liquid Fossil												393.34		8.45	7.28	1.17		4.25
Gasoline type jet fuel			TJ	NO	NO	NO	NO	NO	NO	NO	NCV	NO	NO	NO	NO	NO	NO	NO
Paraffin Waxes			TJ	NO	334.88	NO	NO	41.86	293.02	1.00	NCV	293.02	22.00	6.45	6.45	0.00	0.99	0.00
Used Oils			TJ	NA	58.46	NO	NO	NO	58.46	1.00	NCV	58.46	20.01	1.17	NO	1.17	0.99	4.25
White Spirit			TJ	NO	41.86	NO	NO	NO	41.86	1.00	NCV	41.86	20.00	0.84	0.84	0.00	0.99	0.00
Liquid Fossil Totals												47,251.71		945.39	79.57	865.81		3,144.42
Solid Fossil	Primary Fuels	Anthracite (2)	TJ	NO	NO	NO		NO	NO	NO	NCV	NO	NO	NO	NO	NO	NO	NO
		Coking Coal	TJ	NO	NO	NO		NO	NO	NO	NCV	NO	NO	NO	NO	NO	NO	NO
		Other Bituminous Coal	TJ	NO	4,719.60	52.44	NO	288.42	4,378.74	1.00	NCV	4,378.74	25.68	112.42	NO	112.42	0.98	403.98
		Sub-bituminous Coal	TJ	NO	NO	NO	NO	NO	NO	NO	NCV	NO	NO	NO	NO	NO	NO	NO
		Lignite	TJ	NO	NO	NO		NO	NO	NO	NCV	NO	NO	NO	NO	NO	NO	NO
		Oil Shale	TJ	NO	NO	NO		NO	NO	NO	NCV	NO	NO	NO	NO	NO	NO	NO
		Peat	TJ	100.50	NO	60.30		-60.30	100.50	1.00	NCV	100.50	28.93	2.91	NO	2.91	0.98	10.45
	Secondary Fuels	BKB(3) and Patent Fuel	TJ		NO	NO		NO	NO	NO	NCV	NO	NO	NO	NO	NO	NO	NO
		Coke Oven/Gas Coke	TJ		80.37	NO		NO	80.37	1.00	NCV	80.37	23.84	1.92	NO	1.92	0.98	6.89
Other Solid Fossil												NA		NA	NA	NA		NA
Solid Fossil Totals												4,559.61		117.25	NA,NO	117.25		421.31
Gaseous Fossil		Natural Gas (Dry)	TJ	NO	59,081.20	NO		5,083.34	53,997.86	1.00	NCV	53,997.86	15.14	817.56	NO	817.56	1.00	2,997.72

FUEL TYPES			Unit	Production	Imports	Exports	International bunkers	Stock change	Apparent consumption	Conversion factor (TJ/Unit)	NCV / GCV (1)	Apparent consumption (TJ)	Carbon emission factor (t C/TJ)	Carbon content (Gg C)	Carbon stored (Gg C)	Net carbon emissions (Gg C)	Fraction of carbon oxidized	Actual CO_2 emissions (Gg CO_2)
Other Gaseous Fossil												NA		NA	NA	NA		NA
Gaseous Fossil Totals												53,997.86		817.56	NA,NO	817.56		2,997.72
Total												105,809.18		1,880.20	79.57	1,800.62		6,563.45
Biomass total												53,385.17		1,566.96	NO	1,566.96		5,634.41
		Solid Biomass	TJ	65,086.80	180.60	13,358.30		1,427.10	50,482.00	1.00	NCV	50,482.00	30.02	1,515.24	NO	1,515.24	0.98	5,444.75
		Liquid Biomass	TJ	2,442.45	1,725.91	2,110.47		75.46	1,982.43	1.00	NCV	1,982.43	19.30	38.26	NO	38.26	1.00	140.29
		Gas Biomass	TJ	920.74	NO	NO		NO	920.74	1.00	NCV	920.74	14.62	13.47	NO	13.47	1.00	49.37

Table 2 Comparison of CO_2 emissions from fuel combustion (Table 1.C)

FUEL TYPES	REFERENCE APPROACH			SECTORAL APPROACH (1)		DIFFERENCE (2)	
	Apparent energy consumption (3) (PJ)	Apparent energy consumption (excluding non-energy use and feedstocks) (4) (PJ)	CO_2 emissions (Gg)	Energy consumption (PJ)	CO_2 emissions (Gg)	Energy consumption (%)	CO_2 emissions (%)
Liquid Fuels (excluding international bunkers)	47.25	43.19	3,144.42	54.01	3,940.04	-20.03	-20.19
Solid Fuels (excluding international bunkers) (5)	4.56	4.56	421.31	5.02	463.20	-9.26	-9.04
Gaseous Fuels	54.00	54.00	2,997.72	53.37	2,949.19	1.18	1.65
Other (5)	2.24	2.24	87.29	1.86	66.68	20.56	30.91
Total (5)	***108.05***	***103.99***	***6,650.74***	***114.26***	***7,419.10***	***-8.99***	***-10.36***

Table 3 Energy balance of Latvia in year 2011 (TJ)

	Oil products - total	Shale oil	LPG	Gasoline and aviation gasoline	Kerosene type jet fuel	Diesel oil	RFO	White spirit	Lubricants	Bitumen	Paraffin wax	Petroleum coke	Other liquid	Used oils	Coal	Peat	Peat briquettes	Coke	Natural gas	Fuelwood	Used tires	Municipal wastes	Charcoal	Bioethanol	Biodiesel	Landfill gas	Sludge gas	Straws
NCV		39.35	45.54	43.97	43.21	42.49	40.6	41.86	41.86	41.86	41.86	32.98	41.86	29.23	26.22	10.05	15.49	26.79	33.69		27.98	17.18	30	0.03	0.04	19.03	20.49	14.4
production of energy resources																10				72830				53	2217	818	102	43
primary product receipts	29													29							84	69						
import	82909	158	6331	11315	9291	39388	6455	42	2177	2846	335	66	126	59	5192			80	59121	179	420	1752	60	475	1110			
export	19740	118	3871	229	7173	6840			1340				126		184	50				22869			300	228	1725			
bunkering	8987					3187	5800																					
interproduct transfer	0				4061																							
stock changes	1992	39	46	43	1254	552	80		42	84	42				105	80	3		5087	3239		86	0	18	89			
statistical differences	10632			179		10453																						
gross energy - total	62851	79	2414	11222	4925	39262	735	42	795	2930	293	66	0	88	4903	40	3	80	54034	46901	504	1735	240	318	1513	818	102	43
Transformation sector	618		8			37	570							3	524	9	0		35944	6855			300		52	666	102	29
public heat plants	393					25	365							3	14	9			6030	3919								
autoproducer heat plants	22		8			12	2								105				876	1487								29
public CHP	203						203								405				28634	662					52	400	102	
autoproducer CHP																			404	103						266		
autoproducer electricity plants	22		8			12	2								105				876	1487								29
charcoal production plants																				630			300					
Energy sector*	255					255													943									
Losses																			505	7								
Final consumption:	61979	79	2406	11222	4925	38970	165	42	796	2930	293	66		85	4379	30	3	80	16641	40039	504	1735	60	318	1461	152		14
transport:	47794		1184	10738	4908	30210			754															318	1432			
international air	4906				4906																							
domestic air	9			7	2																							
road	39521		1184	10728		26939			670															318	1341			
railways	3228					3144			84																91			
domestic navigation	130			3		127																						
pipelines																												
Industry (including construction)	5714	79	228	44		1785	162	42		2930	293	66		85	2229	2	0	80	7276	10829	504	1735	0		1			0
Other sectors:	8471		994	440	17	6975	3		42						2150	28	3		9365	29210			60		28	152		14
other consumers	1475		46	88	17	1324									1049	28	3		4380	2778					28	114		14
residential	2229		903	264		1062									1075				4480	26084			60					0
agriculture / forestry / hunting	4300		45	88		4122	3		42						26				505	328					0	38		
fishery	467					467														20								

ANNEX 5: ASSESSMENT OF COMPLETENESS AND (POTENTIAL) SOURCES AND SINK OF GHG EMISSIONS AND REMOVALS EXCLUDED FOR THE ANNUAL INVENTORY SUBMISSION

Completeness of the Latvia's inventory 2011 is evaluated by sectors in the tables below. The completeness is estimated by the gases (CO_2, CH_4, N_2O, F-gases, NMVOC) and emission categories according to the detailed CRF-classification.

Abbreviations used in tables:

X - included in the inventory
C - confidential business information
IE - included elsewhere
NA - not applicable
NE - not estimated
NO - not occurring in Latvia

Energy

GREENHOUSE GAS SOURCE AND SINK CATEGORIES	CO_2	CH_4	N_2O	Explanation, -if not estimated -if included elsewhere
Energy				
A. Fuel Combustion Activities				
1. Energy Industries				
a. Public Electricity and Heat Production	X	X	X	
b. Petroleum Refining	NO	NO	NO	
c. Manufacture of Solid Fuels and Other Energy Industries	X	X	X	
2. Manufacturing Industries and Construction				
a. Iron and Steel	X	X	X	
b. Non-Ferrous Metals	X	X	X	
c. Chemicals	X	X	X	
d. Pulp, Paper and Print	X	X	X	
e. Food Processing, Beverages and Tobacco	X	X	X	
f. Other *(as specified in table 1.A(a) sheet 2)*	X	X	X	
Other non-specified	X	X	X	
3. Transport				
a. Civil Aviation	X	X	X	
b. Road Transportation	X	X	X	
c. Railways	X	X	X	
d. Navigation	X	X	X	
e. Other Transportation *(as specified in table 1.A(a) sheet 3)*	NO	NO	NO	
Other non-specified	NO	NO	NO	
4. Other Sectors				
a. Commercial/Institutional	X	X	X	
b. Residential	X	X	X	
c. Agriculture/Forestry/Fisheries	X	X	X	
5. Other				
a. Stationary	NO	NO	NO	
Other non-specified	NO	NO	NO	
b. Mobile	X	X	X	
Other non-specified	X	X	X	

GREENHOUSE GAS SOURCE AND SINK CATEGORIES	CO_2	CH_4	N_2O	Explanation, -if not estimated -if included elsewhere
B. Fugitive Emissions from Fuels				
1. Solid Fuels				
a. Coal Mining and Handling	NO	NO	NO	
b. Solid Fuel Transformation	NO	NO	NO	
c. Other *(as specified in table 1.B.1)*	NO	NO	NO	
Other non-specified	NO	NO	NO	
2. Oil and Natural Gas				
a. Oil	NA,NO	NA,NO	NA,NO	Notation key "NA" put after the ERT expert's recommendation.
b. Natural Gas	X	X		
c. Venting and Flaring	NO	NO	NO	
Venting	NO	NO		
Flaring	NO	NO	NO	
d. Other *(as specified in table 1.B.2)*	NO	X	NO	
NOx and CO emissions from Natural Gas supply sytem	NO	NO	NO	
Underground storage	NO	X	NO	

Industrial Processes

GREENHOUSE GAS SOURCE AND SINK CATEGORIES	CO_2	CH_4	N_2O	Explanation, -if not estimated -if included elsewhere
Total Industrial Processes				
A. Mineral Products				
1. Cement Production	X			
2. Lime Production	X			
3. Limestone and Dolomite Use	X			
4. Soda Ash Production and Use	NO			
5. Asphalt Roofing	X			
6. Road Paving with Asphalt	X			
7. Other *(as specified in table 2(I).A-G)*	X			
Glass Production	NA	NA	NA	
cement production (NOx and NMVOC)	IE	IE	IE	This subsector is separate because software did not provide possibility to input NOx and NMVOC emissions from cement production processes to original 2.A.1 sub-sector
Production of Bricks	IE	IE	IE	The data for 1990-1992 is reported in the aggregated level in this sector, data for other years are reported for each bricks production plant separately.
Production of Bricks (plant 1)	X	NE	NE	Emissions are not estimated whereby lack of information about methodology and emission factors.
Production of Bricks (plant 2)	NO	NO	NO	
Production of Bricks (plant 3)	X	NE	NE	Emissions are not estimated whereby lack of information about methodology and emission factors.
Production of Bricks (plant 4)	X	NE	NE	Emissions are not estimated whereby lack of information about methodology and emission factors.
Production of Bricks (plant 5)	X	NE	NE	Emissions are not estimated whereby lack of information about methodology and emission factors.
Production of Glass (Use of fluorspar)	X	NE	NE	Emissions are not estimated whereby lack of information about methodology and emission factors.
Production of Glass (Use of potash)	NO	NE	NE	
Production of Glass Fibre	X	NE	NE	
Production of Tiles	X	NE	NE	Emissions are not estimated whereby lack of information about methodology and emission factors.
B. Chemical Industry				
1. Ammonia Production	NO	NO	NO	
2. Nitric Acid Production			NO	
3. Adipic Acid Production	NO		NO	

GREENHOUSE GAS SOURCE AND SINK CATEGORIES	CO_2	CH_4	N_2O	Explanation, -if not estimated -if included elsewhere
4. Carbide Production	NO	NO		
5. Other	NO	NO	NO	
Carbon Black		NO		
Ethylene	NO	NO	NO	
Dichloroethylene		NO		
Styrene		NO		
Methanol		NO		
C. Metal Production				
1. Iron and Steel Production	X	X		
2. Ferroalloys Production	NO	NO		
3. Aluminium Production	NO	NO		
4. SF_6 Used in Aluminium and Magnesium Foundries				
5. Other	NO	NO	NO	
Other non-specified	NO	NO	NO	
D. Other Production				
1. Pulp and Paper				
2. Food and Drink(2)	NA			
E. Production of Halocarbons and SF_6				
1. By-product Emissions				
Production of HCFC-22				
Other				
2. Fugitive Emissions				
3. Other *(as specified in table 2(II))*				
Other non-specified				
F. Consumption of Halocarbons and SF_6				
1. Refrigeration and Air Conditioning Equipment				
2. Foam Blowing				
3. Fire Extinguishers				
4. Aerosols/ Metered Dose Inhalers				
5. Solvents				
6. Other applications using ODS(3) substitutes				
7. Semiconductor Manufacture				
8. Electrical Equipment				
9. Other *(as specified in table 2(II)*				
Production of shoes				
G. Other				
Other non-specified	NA	NA	NA	

F-gases

GREENHOUSE GAS SOURCE AND SINK CATEGORIES	HFC-23	HFC-32	HFC-41	HFC-43-10mee	HFC-125	HFC-134	HFC-134a	HFC-152a	HFC-143	HFC-143a	HFC-227ea	HFC-236fa	HFC-245ca	Total PFCs	SF_6	Explanation, -if not estimated -if included elsewhere
C. Metal Production																
Aluminium Production																
SF_6 Used in Aluminium Foundries															NO	

SF_6 Used in Magnesium Foundries															NO	
E. Production of Halocarbons and SF_6																
1. By-product Emissions	NO	NO	NO	NO	NO	NO	NO	NO	NO	NO	NO	NO	NO	NO	NO	
Production of HCFC-22	NO															
Other	NO	NO	NO	NO	NO	NO	NO	NO	NO	NO	NO	NO	NO	NO	NO	
2. Fugitive Emissions	NO	NO	NO	NO	NO	NO	NO	NO	NO	NO	NO	NO	NO	NO	NO	
3. Other *(as specified in table 2(II).C,E)*	NO	NO	NO	NO	NO	NO	NO	NO	NO	NO	NO	NO	NO	NO	NO	
Other non-specified	NO	NO	NO	NO	NO	NO	NO	NO	NO	NO	NO	NO	NO	NO	NO	
F(a). Consumption of Halocarbons and SF_6 (actual emissions - Tier 2)																
1. Refrigeration and Air Conditioning Equipment	X	X	NO	NO	X	NO	X	X	NO	X	NO	NO	NO	NO	NO	
2. Foam Blowing	NO	NO	NO	NO	NO	NO	X	X	NO	NO	NO	NO	NO	NO	NO	
3. Fire Extinguishers	NO	NO	NO	NO	NO	NO	NO	NO	NO	NO	0.01	NO	NO	NO	NO	
4. Aerosols/Metered Dose Inhalers	NO	NO	NO	NO	NO	NO	X	NO	NO	NO	NO	NO	NO	NO	NO	
5. Solvents	NO	NO	NO	NO	NO	NO	NO	NO	NO	NO	NO	NO	NO	NO	NO	
6. Other applications using ODS[3] substitutes	NO	NO	NO	NO	NO	NO	NO	NO	NO	NO	NO	NO	NO	NO	NO	
7. Semiconductor Manufacture	NO	NO	NO	NO	NO	NO	NO	NO	NO	NO	NO	NO	NO	NO	NO	
8. Electrical Equipment															X	
9. Other *(as specified in table 2(II)F)*																
Production of shoes	NO	NO	NO	NO	NO	NO	X	NO	NO	NO	NO	NO	NO	NO	NO	
G. Other *(please specify)*																
Other non-specified	NA	NA	NA	NA	NA	NA	NA	NA	NA	NA	NA	NA	NA	NA	NA	
F(p). Total Potential Emissions of Halocarbons (by chemical) and SF_6 [4]																
Production	NO	NO	NO	NO	NO	NO	NO	NO	NO	NO	NO	NO	NO	NO	NO	
Import:																
In bulk	NO	NO	NO	NO	NO	NO	X	NO	NO	NO	NO	NO	NO	NO	NE	Emissions are not possible to estimate because of lack of this kind statistical information
In products	NO	X	NO	NO	X	NO	X	X	NO	X	NO	NO	NO	NO	NE	Emissions are not possible to estimate because of lack of this kind statistical information
Export:																
In bulk	NO	NO	NO	NO	NO	NO	NO	NO	NO	NO	NO	NO	NO	NO	NO	
In products	NO	NO	NO	NO	NO	NO	NO	NO	NO	NO	NO	NO	NO	NO	NO	
Destroyed amount	NO	NO	NO	NO	NO	NO	NO	NO	NO	NO	NO	NO	NO	NO	NO	

Solvent and other product use

GREENHOUSE GAS SOURCE AND SINK CATEGORIES	**CO_2**	**N_2O**	**NMVOC**	Explanation, -if not estimated -if included elsewhere
Total Solvent and Other Product Use				
A. Paint Application	X		X	
B. Degreasing and Dry Cleaning	X	NO	X	
C. Chemical Products, Manufacture and Processing	X		X	
D. Other				
1. Use of N_2O for Anaesthesia		X		
2. N_2O from Fire Extinguishers		NE		No statistical data available
3. N_2O from Aerosol Cans		NE		No statistical data available
4. Other Use of N_2O		NE		No statistical data available
5. Other *(as specified in table 3.A-D)*				
Domestic solvent use	X	NO	X	
Glue manufacturing	X	NO	X	

Printing Industry	X	NO	X	

Agriculture

GREENHOUSE GAS SOURCE AND SINK CATEGORIES	CH_4	N_2O	Explanation, -if not estimated -if included elsewhere
Agriculture			
A. Enteric Fermentation			
1. Cattle [(1)]	X		
Option A:			
Dairy Cattle	X		
Non-Dairy Cattle	X		
2. Buffalo	NO		
3. Sheep	X		
4. Goats	X		
5. Camels and Llamas	NO		
6. Horses	X		
7. Mules and Asses	NO		
8. Swine	X		
9. Poultry	NO		
10. Other *(as specified in table 4.A)*	NO		
Other non-specified	NO		
B. Manure Management			
1. Cattle [(1)]	X		
Option A:			
Dairy Cattle	X		
Non-Dairy Cattle	X		
2. Buffalo	NO		
3. Sheep	X		
4. Goats	X		
5. Camels and Llamas	NO		
6. Horses	X		
7. Mules and Asses	NO		
8. Swine	X		
9. Poultry	X		
10. Other livestock	NO		
Other non-specified	NO		
B. Manure Management (continued)			
11. Anaerobic Lagoons		NO	
12. Liquid Systems		X	
13. Solid Storage and Dry Lot		X	
14. Other AWMS		NO	
C. Rice Cultivation			
1. Irrigated	NO		
2. Rainfed	NO		
3. Deep Water	NO		
4. Other *(as specified in table 4.C)*	NO		
Other non-specified	NO		
D. Agricultural Soils			
1. Direct Soil Emissions	NA	X	
2. Pasture, Range and Paddock Manure [(3)]		X	

GREENHOUSE GAS SOURCE AND SINK CATEGORIES	CH_4	N_2O	Explanation, -if not estimated -if included elsewhere
3. Indirect Emissions	NA	X	
4. Other *(as specified in table 4.D)*	NA	NA	
Other non-specified	NA	NA	
E. Prescribed Burning of Savannas	NA	NA	
F. Field Burning of Agricultural Residues			
1. Cereals	NO	NO	
2. Pulses	NO	NO	
3. Tubers and Roots	NO	NO	
4. Sugar Cane	NO	NO	
5. Other *(as specified in table 4.F)*	NO	NO	
Other non-specified	NO	NO	
G. Other			
Other non-specified	NO	NO	

LULUCF

GREENHOUSE GAS SOURCE AND SINK CATEGORIES	**Net CO_2 emissions/removals**	**CH_4**	**N_2O**	Explanation, -if not estimated -if included elsewhere
Total Land-Use Categories				
A. Forest Land				
1. Forest Land remaining Forest Land	X	X	X	
2. Land converted to Forest Land	X	IE,NO	IE,NO	
B. Cropland				
1. Cropland remaining Cropland	X	NO	NO	
2. Land converted to Cropland	X	NO	NE/NO	
C. Grassland				
1. Grassland remaining Grassland	X	X	X	
2. Land converted to Grassland	IE/NO	NO	NO	
D. Wetlands				
1. Wetlands remaining Wetlands	X	IE/NO	IE/NO	
2. Land converted to Wetlands	NO	NE/NO	X	
E. Settlements				
1. Settlements remaining Settlements (3)	NA	NE	NE	No data
2. Land converted to Settlements	X	NE	NE	No data
F. Other Land				
2. Land converted to Other Land	NO	NE	NE	No data
G. Other				
Harvested Wood Products	IE	IE	IE	HWP accounted under living biomass on forest land remaining forest as losses considering instant oxidation of all harvested biomass (above- and below-ground)
Other (please specify)	NA	NA	NA	
Information items				
Forest Land converted to other Land-Use Categories	NE	NE	NE	No data
Grassland converted to other Land-Use Categories	NE	NE	NE	No data

Waste

GREENHOUSE GAS SOURCE AND SINK CATEGORIES	**CO_2**	**CH_4**	**N_2O**	Explanation, -if not estimated -if included elsewhere
Waste				
A. Solid Waste Disposal on Land				

GREENHOUSE GAS SOURCE AND SINK CATEGORIES	CO_2	CH_4	N_2O	Explanation, -if not estimated -if included elsewhere
1. Managed Waste Disposal on Land	NO	X		
2. Unmanaged Waste Disposal Sites	NO	NO		
3. Other	NO	NO		
Other non-specified	NO	NO		
B. Waste Water Handling				
1. Industrial Wastewater		X	X	
2. Domestic and Commercial Waste Water		X	X	
3. Other *(as specified in table 6.B)*		NO	NO	
Other non-specified		NO	NO	
C. Waste Incineration	X	NO	NO	
D. Other *(please specify)*				
Compost production	NE	X	X	No methodology

ANNEX 6: THE ANNUAL INVENTORY SUBMISSION AND THE SUPPLEMENTARY INFORMATION REQUIRED UNDER ARTICLE 7, PARAGRAPH 1, OF THE KYOTO PROTOCOL OR OTHER USEFUL REFERENCE INFORMATION

A.6.1: Annual inventory submission

QA/QC program, including check-lists and procedure description for independent experts for quality assurance of GHG inventory are defined according to 17.02.2009. Cabinet of Ministers Regulation No. 217 (Annex 4): http://www.likumi.lv/doc.php?id=246033.

The following table presents general schedule for implementation of QC/QA activities:

No.	Action	Month											
		05	06	07	08	09	10	11	12	01	02	03	04
Preparation of inventory													
1.	Annual meeting for the experts involved in the inventory in order to discuss and evaluate problems, methods, the QA/QC plan and the necessary activities for next inventory	X	X										
2.	Preparation of emission calculations (inventory)		X	X	X	X	X	X	X				
3.	Preparation of the initial National Inventory Report to the European Commission							X	X	X			
4.	Preparation of the National Inventory Report to the European Commission and the UNFCCC									X	X	X	X
5.	Amending of the prepared National Inventory Report of the European Commission and the UNFCCC if necessary											X	X
6.	Documentation of all materials used in the inventory		X	X	X	X	X	X	X				
7.	Archiving of all documents of the inventory with the												X

No.	Action	Month											
		05	06	07	08	09	10	11	12	01	02	03	04
	aggregator of inventory												
8.	Quality control		X	X	X	X	X	X	X	X	X	X	
9.	UNFCCC GHG inventory review and Draft Review Reports				X	X	X	X	X				
10.	Quality assurance (third party)								X	X	X	X	
11.	Sending of the inventory (final version) to the UNFCCC Secretariat and European Commission												X
12.	Amending the inventory pursuant to review reports of the UNFCCC and the European Commission							X	X		X	X	X
Inventory													
13.	Data collection				X	X	X	X	X				
14.	Calculation of emissions				X	X	X	X	X	X	X		
15.	Recalculation of emissions if errors or uncertainties have been detected							X	X	X	X	X	
16.	Entering of emissions in the common standardised reporting format software						X	X	X	X			
17.	Entering of emissions in the CRF Reporter if there are changes										X	X	
18.	Analysis and entering of the key sources in the CRF Reporter									X	X	X	
19.	Generatio the CRF and *XML* for sending									X		X, if changed	X, if changed

No.	Action	Month											
		05	06	07	08	09	10	11	12	01	02	03	04
20.	Analysis of uncertainties						X	X	X	X	X		
21.	Verification	X	X	X	X	X	X			(X)	(X)	(X)	

- **Detailed information about Improvement plan for LULUCF sector**

IMPROVEMENT PLAN TO DEVELOP AND VERIFY METHODOLOGIES OF CALCULATIONS OF GHG EMISSIONS AND CO_2 REMOVALS IN LULUCF SECTOR

By Latvian State Forestry Research Institute "Silava" (LSFRI Silava)

BACKGROUND INFORMATION

The improvement plan to develop and to scientifically verify methodologies and implied emission factors for the National GHG inventory in the LULUCF sector was elaborated in 2009-2010 by the LSFRI Silava in cooperation with invited experts from Latvia University of Agriculture, Ministry of Agriculture of Republic of Latvia and Tartu University of Life Sciences as a project application "National greenhouse gas inventory supporting studies" for the European Regional Development Fund supported research and development program[1] managed by the Ministry of Education and Science of Republic of Latvia.

The application was submitted to the Ministry of Education and Science of Republic of Latvia in 9th of March, 2010. Evaluation of the project applications will be completed latest in September, 2010. In case in the application will receive funding from the European Regional Development fund, practical work will be started in October, 2010 and continued until the end of November, 2013 when all methodologies should be verified, published in scientific articles, presented in the greenhouse gas (GHG) inventory in Land Use, Land Use Change and Forestry (LULUCF) sector dedicated international conference and incorporated into the National GHG inventory.

PROJECT SUMMARY

The overall target of the project is to fulfil Latvia's international obligations within the frame of the United Nations Framework Convention on Climate Change and to create preconditions for the inclusion of CO_2 removals through forestry practices and wood processing in the emission trading scheme.

The specific target of the project is to develop a methodological basis for the preparation of national greenhouse gas emission and removals inventory report. This methodological basis should fit to requirements of the Good Practice Guidelines in the sector of Land Use, Land Use Change and Forestry by the Intergovernmental Panel on Climate Change.

The project corresponds to the priority field of science – sustainable use of local resources (earth entrails, forest, food and transport) – new products and technologies.

According to the paragraph 3.1 of the regulation Nr. 752 (07.07.2009) of the Cabinet of Ministers, the project complies with the following criteria:

1. project is implemented by a scientific institution which, accordingly to its statute, performs scientific activities and dissemination of the results of scientific activities transferring knowledge and technologies; the payments obtained while implementing basic activities are repeatedly invested in the basic activities;

[1] http://translate.google.com/translate?js=y&prev=_t&hl=en&ie=UTF-8&layout=1&eotf=1&u=http%3A%2F%2Fesfondi.izm.gov.lv%2F1060.html&sl=lv&tl=en (original in Latvian - http://esfondi.izm.gov.lv/1060.html)

2. businessmen who can influence the scientific institution , have no privilege on the capacity of the research or results of the research;
3. public accessibility of the results of research will be ensured in the frames of the project.

To achieve the goals following activities are planned in the project:

1. Research & development;
   - 1.1. Definitions and other normative regulations,
   - 1.2. Land use balance,
   - 1.3. Biomass and carbon removals of trees;
   - 1.4. Emissions related to deadwood,
   - 1.5. Emissions related to soil and litter,
   - 1.6. Emissions related to forest damage,
   - 1.7. The integration of the methodology for greenhouse gas inventory in the National forest inventory.
2. Ensuring of the public accessibility of research results.

Place of implementation of the project – LSFRI Silava.

Planned total length of project implementation – 36 months.

JUSTIFICATION OF THE PROBLEMS ADDRESSED IN PROJECT

Latvia has undertaken the fulfilment of international obligations in the prevention of climate change by signing the United Nations Framework Convention on Climate Change in 1992 and ratifying it in 1995. The aim of the Convention is to decrease the concentration of greenhouse gases (GHG) in the atmosphere down to the level that would prevent dangerous anthropogenic interference to the climatic system. According to the Kyoto protocol of the Convention, in the period from 2008 to 2012 Latvia together with other countries must decrease anthropogenic GHG emissions by 8% compared to 1990. According to the Convention, the member states every year submit annual GHG inventory report, as well as prepare national reports that reflect the relevance of accomplished and planned tasks. According to the regulation No. 157 (17.02.2009) of the Cabinet of Ministers, the preparation of GHG inventory report in the LULUCF sector is carried out by LSFRI Silava.

One of the mechanisms mentioned in the Kyoto protocol to reduce GHG emissions is international emission trade. Starting from 2008, also sector of land use, land use change and forestry is included in this scheme, and at the end of the reference period (2012) Latvia will be able to apply for additional 6,23 mill. tons of CO_2 quotas. However, to be able to use these quotas, the national system of GHG inventory must correspond with the quality requirements stated in the Good Practice Guidelines in the sector of Land Use, Land Use Change and Forestry by the Intergovernmental Panel on Climate Change (IPCC GPG LULUCF) and must be scientifically verified. In case the requirements of IPCC are not met, Latvia can be excluded from the emission trading scheme and lose potential income connected with the reduction of GHG emissions in the industry and other sectors.

<u>The main problems</u> connected with GHG emission and removals inventory in the LULUCF sector are incomplete methodological basis for the inventory of alive and dead biomass, soil and litter CO_2 removals and GHG emissions, as well as incomplete land use balance inventory system that lacks accurate geographical information on the historical dynamics of different land use types.

These problems have to be solved by the end of 2012 when Latvia must submit a final report in the frames of Kyoto protocol. If Latvia fails to put into practice appropriate inventory and calculations of GHG emissions and CO_2 removals in the LULUCF sector, the state can lose emission quotas in this sector (6,23 mill. tons of CO_2 equivalent in the time period from 2008 to 2012) but in the worst case the country can be excluded from the emission trading scheme until methodological issues are solved.

The cause for shortcomings in the LULUCF sector inventory system are the changes in the policy of climate change and forestry, creating new mechanisms for the development of these sectors but also setting new tasks to verify the effectiveness of the use of these mechanisms. Similar problems of the LULUCF sector are presently solved in all developed countries of the world.

There are no viable alternatives for the implementation of the goals stated in the project because, according to the guidelines (IPCC GPG LULUCF), every developed country is obliged to produce an individual methodology for the inventory of most important sources of emissions and removals in the LULUCF sector. Alternative solution is the secession from the Kyoto protocol, however, in this case the gain, giving up science development, cannot be compared to the losses that would be created by exclusion from the emission trading scheme. Only in the LULUCF sector the losses during the next 5 years would be around 124 mill. EUR, recalculating to the present prices of emission quotas.

References:

- Edited by Penman J., Gytarsky M., Hiraishi T., Krug T., Kruger D., Pipatti R., Buendia L., Miwa K., Ngara T., Tanabe K., Wagner F., *Good Practice Guidance for Land Use, Land-Use Change and Forestry (IPCC GPG LULUCF)*, 2003;
- Latvian Environment, Geology & Meteorology Agency, *Latvia's national inventory report Submitted under United Nations Convention on Climate Change*, 2009;
- United Nations, *15/CMP.1 Guidelines for the preparation of the information required under Article 7 of the Kyoto Protocol*, 2006;
- United Nations, Kyoto Protocol to the United Nations Framework Convention on Climate Change, 1998.

Description of solutions proposed in the project

Within the scope of the project in collaboration with the leading experts of the LULUCF sector in the Nordic countries and the Baltic states the methodology of GHG emissions and removals inventory will be developed and integrated in the existing inventory systems, including:

1. The matrix of land use balance analysis, as well as the model for the calculation of CO_2 removals in alive and dead biomass (*dieback of living trees and logging residues*) will be integrated in the National forest inventory (NFI) program;
2. The calculations of GHG emissions and CO_2 removals in soils with the organic horizon not thicker than 80 cm and in forest litter will be linked with Level I forest monitoring program;
3. The inventory of GHG emissions created by forest felling and CO_2 removals in wood products will be linked with Forest fund data base maintained by State Forest service;
4. The assessment of damages, as well as analysis of GHG emissions and CO_2 removals in organic soils with the organic horizon above 80 cm will be carried out based on the data from long-term research.

According to the regulation No 590 (28.08.2007) and No 313 (07.04.2009) of the Cabinet of Ministers, NFI and Level I forest monitoring in the frames of international project FutMon are carried out by LSFRI "Silava".

Taking into account the structure of GHG inventory and specific character of problems to be solved, following research activities are outlined in the project:

1. Development of definitions and other normative regulations to ensure the integrity of land use balance and emission data.
2. Updating of the land use balance starting from year 1990 and defining territories corresponding with points 3.3 and 3.4 of the Kyoto protocol, as well as lands where no economic activities are carried out.
3. Analysis of the biomass and carbon removals of trees, including development of species- and land use type-specific equations for above- and below-ground biomass, as well as coefficients for the recalculation of carbon content.
4. Emissions related to deadwood, including deadwood in the growing forest, wood products, logging residues and their use (including burning), and analysis of the decomposition of tree root system.
5. Emissions and removals related to soil and litter, including the development of method for the inventory of soil and litter emissions and removals and integration of this method in the existing modelling instruments (*Yasso*) for the prognosis of the impact of different activities (melioration, logging, land use change).
6. Emissions related to forest damage, including forest fires, animal damage and wind damage.
7. The integration of GHG inventory methodology in the NFI and forest management planning models for the preparation of short and long term prognoses and forest policy planning.

The main result of all project activities will be articles in the international peer reviewed journals, serving as the instrument for scientific verification of the GHG inventory methodology. Altogether it is planned to prepare 9 scientific articles.

In addition, during the project implementation, public accessibility of scientific results will be ensured via project home page and regular (twice a year) press releases. In the final stage of the project an international scientific conference will be organized, where the developed methodology will be presented and discussed. The conference materials will be summarized in proceedings with international editorial board. The language of the proceedings will be English.

DESCRIPTION OF PLANNED ACTIVITIES

Within the scope of the project it is planned to carry out an industrial research in forest science that includes evaluation and broadening of available knowledge related to the GHG inventory in the LULUCF sector, in order to develop a methodology necessary for the preparation of national GHG inventory report and sustainability analysis of land use and timber industry. The implementation of the project will ensure the return of financial resources gained by emission trade to the forest sector through activities promoting sustainable forestry and use of wood products. The project is directed towards significant improvement of existing technologies (inventory methodology). There will be following research activities in the project:

1. Development of definitions and other normative regulations to ensure integrity of land use balance and removals data. The main task of the activity is to use unified nomenclature of land use types in the territory of Latvia, that would include classification principles used in several, also international data bases. It is planned to finish this activity within 3 months from the start of the project.

2. Update of land use balance starting from 1990 and defining territories that correspond to the points 3.3 and 3.4 of the Kyoto protocol, as well as lands where no economic activity is carried out. The main task of the activity is, based on the definitions developed in the 1st scientific activity, to identify the change of land use type in all NFI sample plots including those outside forest land starting from 1990. The change of land use type will be identified analysing series of LANDSAT satellite images and identifying the year of transformation for every sample plot.

3. Analysis of tree biomass and carbon removals is the most extensive scientific activity including development of species- and land use type-specific tree above- and below-ground biomass equations and carbon concentration recalculation coefficients. Original biomass and carbon recalculation equations will be developed for the main tree species (pine (*Pinus sylvestris* L.), spruce (*Picea abies* (L.) H.Karst.), birch (*Betula pendula* Roth and *Betula pubescens* Ehrh.), aspen (*Populus tremula* L.), black alder (*Alnus glutinosa* L.), grey alder (*Alnus incana* (L.) MEPRDnch), ash (*Fraxinus excelsior* L.) and oak (*Quercus robur* L.)) using tree height and breast height diameter as factorial features. To simplify the task the development of equations for conifers and birch will be based on equations used in the GHG inventory in Finland. For less common tree and shrub species contributing only to a small part of GHG balance in the forest lands unified recalculation equations will be developed, based on experimental and literature data. For each tree species several sets of equations will be developed, according to the definitions of 1st scientific activity.

4. Emissions related to deadwood include the dieback of living trees in growing forest and wood products originating from forest felling (timber, biofuel, logging residues and tree below-ground biomass). A significant part of GHG emissions is formed burning the logging residues immediately after logging, therefore a method to estimate an actual amount of this part of emissions will be developed, expanding NFI observations in the forest stands felled in the current year. Within the frames of this activity also a monitoring method for the amount of biofuel production will be developed, based on the NFI grid and additional observations in stands to be felled. In the analysis of removals and emissions from wood products SCAD (*Stock Change Approach on Domestically produced and consumed wood*) method will be used. The amount of dieback of volume increment will be determined using research results obtained in Tartu, Estonian University of Life Sciences. In this task expert from Estonian University of Life Sciences, Ph.D. Kajar Köster will take part.

5. The activity related to emissions and removals in the soil and litter includes the development of method for inventory of CO_2 removals and GHG emissions from soil and litter, as well as integration of this method in the existing modelling instruments (*Yasso*) for the prognosis of the impact of economic activities (melioration, forest felling, land use type change). The activity is divided into two parts according to the thickness of peat layer – (1) mineral soils and shallow organic soils (thickness of organic layer less than 80 cm) and (2) organic soils with thick organic layer. In the first group the methodology of GHG emissions and CO_2 inventory will be based on the grid of long-term monitoring sample plots including forest lands, arable lands and grasslands. For the second group of soils recalculation equations will be developed based on long-term observations in forest and non-forest land.

6. Emissions related to forest damage, including forest fires, animal and wind damage. In this activity data from NFI, State forest service, scientific research, and other sources of information and GIS technologies will be integrated in order to develop a calculation model for the biomass burned in the forest fires. The calculation model of other damage (wind and animals) will be based on NFI data. To prevent double record of emissions researchers of this activity will closely collaborate with researchers from 5th activity.

7. Integration of GHG inventory methodology in the NFI and forest management planning models will be carried out gradually during all project progress. The activity can be finished only after work with

biomass and carbon recalculation equations will be over. This activity includes also development of instructions for field work and calculations and methodology of data validation. The integration of new models in the NFI data base will be carried out so, that also processing of previously obtained data will be possible.

QUANTITATIVE INDICATORS OF THE PROJECT'S RESULTS

The main outputs of the project will be set of scientific publications targeted to be a basis for the GHG inventory in LULUCF sector. The proposed methodologies will be verified and applied practically in the future inventories during the implementation of the project. The methodologies will be introduced into the inventory as soon as they will be elaborated and verified, therefore future inventories will be considerably updated. All methodologies should be ready for use before completion of the National inventory report in 2014.

Quantitative indicators of the project are provided in Table 1, comparison with currently utilized methodologies – in Table 2, the project time schedule – in Table 3.

Table 1 Quantitative indicators

No. of activity	Title of activity	Result	Results in measurable units	
			Count	Measurement unit
1.	Research			
1.1	Definitions and other normative regulations	Instruction for the identification of land use and management types	1	instruction
1.2	Land use balance	Methodology for the calculation of land use balance	1	methodology
		Land use change matrix since 1990 with geographically identifiable territorial units	1	report, integrated in the GHG inventory report
1.3	Biomass and carbon removals of trees	Methodology for the calculation of tree biomass and carbon removals	1	methodology
		Recalculation of CO_2 removals in live biomass since 1990	1	report, integrated in the GHG inventory report
1.4	Emissions related to deadwood	Methodology for the calculation of the increase of dead biomass	1	methodology
		Methodology for the emission calculations related to forest felling and wood products	1	methodology
		Methodology for monitoring of burning logging residues and calculation of emissions	1	methodology
		Recalculation of GHG emissions related to deadwood since 1990	1	report, integrated in the GHG inventory report
1.5	Emissions and removals related to soil and litter	Methodology for CO_2 removals and GHG emission calculations in forest litter, mineral soils and shallow organic soils	1	methodology
		Methodology for GHG emission calculations in drained organic soils with thick organic layer	1	methodology
		Recalculation of GHG emissions and CO_2 removals related to soil and litter since 1990	1	report, integrated in the GHG inventory report
1.6	Emissions related to forest damages	Methodology for the evaluation of GHG emissions due to the forest fires	1	methodology
		Methodology for the evaluation of GHG emissions due to last year's grass fires	1	methodology

No. of activity	Title of activity	Result	Results in measurable units	
			Count	Measurement unit
		Recalculation of GHG emissions related to forest fires and last year's grass fires since 1990	1	report, integrated in the GHG inventory report
1.7	The integration of the methodology for GHG inventory in the NFI	Methodologies developed during the research activities and necessary additional information integrated and verified in the NFI system	1	calculation model
		Instruction for the fieldwork and calculations in NFI	1	instruction
2	Ensuring of the public accessibility of research results	The results of the research activities published in international peer-reviewed journals	9	Internationally acknowledged publications
		An international conference related to questions of GHG inventory in the LULUCF sector is organized	1	scientific conference
		Chapters in the doctoral degree works	3	doctoral degree studies

Table 2 Comparison of currently applied and proposed approaches in GHG inventory of the LULUCF sector

Project activity	Solutions used currently	Solutions proposed by the project
Definitions and other normative regulations	Land use definitions are only partly compatible with definitions given in the IPCC GPG LULUCF 2003. Economic activities in the forest lands are not stated, as well as prerequisites for the land use change.	Land use definitions given by IPCC GPG LULUCF 2003 will be improved according to the local conditions and integrated in the NFI methodology. Economic activities on forest land and non-forest land corresponding to the points 3.3 and 3.4 of the Kyoto protocol will be identified.
Land use balance	Data provided by State Land service about the area of agricultural lands, forest lands, wetlands, infrastructure and other lands corrected by the NFI data about forest lands. The system does not ensure that land use change is geographically identifiable outside forest lands.	Land use balance will be included in the NFI, recalculating the land use every year, according to the data of exact measurements. Land use change will be geographically identifiable. Land use balance calculation will also allow identifying the area of organic agriculture lands in Latvia.
Biomass and carbon removals in living trees	To recalculate removals in the tree biomass coefficients corresponding to the lowest quality level (*Tier1*) are used (coefficient to recalculate stem volume into above-ground biomass – 1.3, coefficient to recalculate above-ground biomass into below-ground biomass – 1.32, wood density – 0.5, carbon concentration in biomass – 50%.)	Species- and land use type-specific equations for the recalculation of carbon removals will be developed, using measured tree height and diameter data. These equations will be scientifically verified and suitable for local conditions.
Stock change of dead biomass	Is not considered at all due to the lack of appropriate method.	Will be evaluated, using data from NFI and former research, recalculation starting from 1990 will be performed, based on changes in stand age structure and species composition.

Project activity	Solutions used currently	Solutions proposed by the project
Emissions related to forest felling	To calculate CO_2 emissions from the felled volume, coefficients corresponding to *Tier1* are used. Emissions are calculated using the method of "direct oxidation", assuming that all biomass (stem, logging residues, and roots) turns to emissions immediately after felling.	GHG emissions will be calculated using equations for the increment of live tree biomass. The decomposition rate of logging residues and tree root systems, as well as life length of wood materials will be taken into account, giving up the method of "direct oxidation".
Burning of logging residues	It is assumed that 30% of the logging residues are left for burning, thus significantly overestimating actual GHG emissions that are related to the forest felling.	For the inventory of further use (including burning) of logging residues a new monitoring system based on the NFI data and remote sensing, will be used. The results will be statistically credible and geographically identifiable.
Emissions and removals related to the soil and litter	CO_2 emission calculations are carried out only for drained organic soils using *Tier1* coefficients corresponding to the temperate zone. Thus emissions related to soil are significantly overestimated.	CO_2 removals and GHG emissions from the mineral soils and shallow organic soils will be evaluated using Level I forest monitoring sample plots. GHG emissions from organic soils with organic layer thicker than 80 cm will be calculated using data from long-term scientific research.
Emissions related to forest damage	Only emissions related to forest fires are evaluated, using equations that are not verified in the local conditions.	GHG emissions from forest and last year's grass fires will be calculated using data about types and areas of fires provided by State Fire and Rescue service and State Forest service, as well as scientifically verified equations. GHG emissions related to wind and other damage will be calculated using NFI data.
Integration of inventory of GHG emissions and CO_2 removal methodology into the NFI	Calculations are not connected to NFI observations.	In the frames of the project the methodology will be integrated in the NFI field work and calculation system, securing transparency of data gathering and calculations, as well as continuity of the process.

Table 3 Time schedule of the project

No. and title of research activity	Schedule of implementation of the project's activities																			
	2009				2010				2011				2012				2013			
	1.	2.	3.	4.	1.	2.	3.	4.	1.	2.	3.	4.	1.	2.	3.	4.	1.	2.	3.	4.
1.1. Definitions and other normative regulations								X												
1.2 Land use balance									X	X	X	X								
1.3 Biomass and carbon removals in living trees									X	X	X	X	X	X	X	X				
1.4 Carbon stock change of dead biomass									X	X	X	X	X	X	X	X				
1.5 Emissions and removals related to soil and litter								X	X	X	X	X	X	X	X	X	X	X	X	
1.6 Emissions related to forest damage												X	X	X						
1.7 The integration of the methodology for GHG inventory in the NFI													X	X	X	X	X	X	X	
2. Dissemination								X	X	X	X	X	X	X	X	X	X	X	X	

A.6.2: Emission trends

CO_2

Years 1990-2000

GREENHOUSE GAS SOURCE AND SINK CATEGORIES	1990	1991	1992	1993	1994	1995	1996	1997	1998	1999	2000
	(Gg)										
1. Energy	**18,392.36**	**16,903.80**	**13,706.83**	**11,618.54**	**10,044.75**	**8,840.19**	**8,916.94**	**8,383.57**	**7,999.14**	**7,367.09**	**6,776.86**
A. Fuel Combustion (Sectoral Approach)	18,392.34	16,903.78	13,706.81	11,618.52	10,044.73	8,840.17	8,916.92	8,383.55	7,999.12	7,367.07	6,776.84
1. Energy Industries	6,266.63	5,751.17	4,925.94	3,973.07	3,731.92	3,417.88	3,549.52	3,305.68	3,349.94	2,924.94	2,475.88
2. Manufacturing Industries and Construction	3,724.11	2,804.05	2,368.39	2,098.92	1,899.68	1,863.11	1,826.91	1,780.98	1,559.86	1,411.70	1,151.91
3. Transport	2,897.89	2,714.09	2,419.58	2,229.80	2,115.01	2,013.78	1,980.38	1,972.17	1,947.93	1,901.88	2,111.87
4. Other Sectors	5,503.71	5,634.46	3,992.90	3,316.73	2,298.12	1,539.28	1,556.85	1,312.38	1,138.14	1,119.22	1,037.04
5. Other	NO	NO	NO	NO	NO	6.12	3.25	12.34	3.25	9.33	0.14
B. Fugitive Emissions from Fuels	0.02	0.02	0.02	0.02	0.02	0.02	0.02	0.02	0.02	0.02	0.02
1. Solid Fuels	NO	NO	NO	NO	NO	NO	NO	NO	NO	NO	NO
2. Oil and Natural Gas	0.02	0.02	0.02	0.02	0.02	0.02	0.02	0.02	0.02	0.02	0.02
2. Industrial Processes	**598.81**	**536.03**	**256.62**	**83.64**	**146.69**	**159.29**	**175.11**	**180.64**	**181.24**	**218.45**	**172.95**
A. Mineral Products	585.98	527.32	250.88	76.63	140.14	154.86	171.63	172.64	172.74	210.74	164.52
B. Chemical Industry	NO	NO	NO	NO	NO	NO	NO	NO	NO	NO	NO
C. Metal Production	12.83	8.71	5.73	7.01	6.55	4.43	3.49	8.00	8.50	7.71	8.43
D. Other Production	NA	NA	NA	NA	NA	NA	NA	NA	NA	NA	NA
G. Other	NO	NO	NO	NO	NO	NO	NO	NO	NO	NO	NO
3. Solvent and Other Product Use	50.70	46.49	44.20	41.35	40.51	36.96	38.53	39.12	40.00	40.76	41.62
5. Land Use, Land-Use Change and Forestry(2)	**-22,474.48**	**-23,211.68**	**-23,309.87**	**-21,991.12**	**-23,068.11**	**-21,811.74**	**-22,285.26**	**-20,426.39**	**-19,415.98**	**-19,567.59**	**-19,464.37**
A. Forest Land	-23,068.99	-23,855.16	-24,194.43	-23,316.65	-23,910.73	-22,313.06	-22,438.50	-19,709.50	-18,279.36	-18,103.77	-17,902.36
B. Cropland	602.97	618.47	633.97	649.42	664.92	680.42	506.55	507.23	510.81	513.74	518.90
C. Grassland	40.15	41.34	42.64	43.86	45.17	47.08	49.35	49.22	51.57	55.12	55.44
D. Wetlands	19.80	19.80	19.80	19.80	19.80	19.80	19.80	19.80	19.80	19.80	19.80
E. Settlements	104.59	133.88	163.16	192.44	221.73	251.01	255.53	278.86	302.19	325.52	348.84
F. Other Land	NE,NO	NE,NO	NE,NO	NE,NO	NE,NO	NE,NO	NE,NO	NE,NO	NE,NO	NE,NO	NE,NO
G. Other	-173.00	-170.00	25.00	420.00	-109.00	-497.00	-678.00	-1,572.00	-2,021.00	-2,378.00	-2,505.00
6. Waste	**NA,NO**	**NA,NO**	**NA,NO**	**NA,NO**	**NA,NO**	**NA,NO**	**NA,NO**	**NA,NO**	**NA,NO**	**0.74**	**1.18**
A. Solid Waste Disposal on Land	NA,NO	NA,NO	NA,NO	NA,NO	NA,NO	NA,NO	NA,NO	NA,NO	NA,NO	NA,NO	NA,NO
C. Waste Incineration	NO	NO	NO	NO	NO	NO	NO	NO	NO	0.74	1.18
D. Other	NA	NA	NA	NA	NA	NA	NA	NA	NA	NA	NA
7. Other (as specified in Summary 1.A)	**NO**	**NO**	**NO**	**NO**	**NO**	**NO**	**NO**	**NO**	**NO**	**NO**	**NO**
Total CO2 emissions including net CO2 from LULUCF	**-3,432.60**	**-5,725.36**	**-9,302.22**	**-10,247.59**	**-12,836.17**	**-12,775.30**	**-13,154.67**	**-11,823.06**	**-11,195.61**	**-11,940.56**	**-12,471.76**
Total CO2 emissions excluding net CO2 from LULUCF	**19,041.87**	**17,486.32**	**14,007.64**	**11,743.53**	**10,231.94**	**9,036.44**	**9,130.59**	**8,603.33**	**8,220.37**	**7,627.03**	**6,992.61**
Memo Items:											
International	**1,721.08**	**747.50**	**653.73**	**756.98**	**963.50**	**554.58**	**408.31**	**324.27**	**137.42**	**121.77**	**106.14**

GREENHOUSE GAS SOURCE AND SINK CATEGORIES	1990	1991	1992	1993	1994	1995	1996	1997	1998	1999	2000
	(Gg)										
Bunkers											
Aviation	221.15	299.01	84.10	84.10	77.87	77.87	99.67	99.67	90.33	90.33	80.98
Marine	1,499.94	448.49	569.64	672.88	885.63	476.72	308.64	224.60	47.10	31.44	25.15
Multilateral Operations	NO	NO	NO	NO	NO	NO	NO	NO	NO	NO	NO
CO2 Emissions from Biomass	2,964.03	3,476.19	3,466.38	3,862.35	4,002.69	4,538.71	4,744.63	4,755.57	4,693.52	4,608.23	4,280.66

Years 2001-2011

GREENHOUSE GAS SOURCE AND SINK CATEGORIES	2001	2002	2003	2004	2005	2006	2007	2008	2009	2010	2011	Change from base to latest reported year
	(Gg)											%
1. Energy	**7,169.62**	**7,168.08**	**7,382.93**	**7,402.71**	**7,506.59**	**7,950.19**	**8,272.03**	**7,847.13**	**7,159.24**	**7,968.23**	**7,419.12**	**-59.66**
A. Fuel Combustion (Sectoral Approach)	7,169.60	7,168.06	7,382.91	7,402.69	7,506.57	7,950.17	8,272.01	7,847.11	7,159.22	7,968.21	7,419.10	-59.66
1. Energy Industries	2,418.22	2,313.69	2,246.11	2,057.56	2,047.55	2,073.32	1,943.80	1,916.58	1,865.12	2,247.73	2,071.74	-66.94
2. Manufacturing Industries and Construction	1,062.62	1,110.09	1,140.00	1,150.61	1,165.21	1,213.16	1,225.26	1,111.76	883.50	1,069.24	876.11	-76.47
3. Transport	2,502.24	2,580.90	2,725.06	2,864.10	2,990.42	3,298.23	3,735.21	3,528.57	3,130.03	3,205.12	3,084.85	6.45
4. Other Sectors	1,186.35	1,156.63	1,265.41	1,318.95	1,295.79	1,356.59	1,364.90	1,286.81	1,275.25	1,438.26	1,379.21	-74.94
5. Other	0.17	6.76	6.33	11.47	7.60	8.87	2.83	3.39	5.32	7.85	7.20	100.00
B. Fugitive Emissions from Fuels	0.02	0.02	0.02	0.02	0.02	0.02	0.02	0.02	0.02	0.02	0.02	11.12
1. Solid Fuels	NO	NO	NO	NO	NO	NO	NO	NO	NO	NO	NO	0.00
2. Oil and Natural Gas	0.02	0.02	0.02	0.02	0.02	0.02	0.02	0.02	0.02	0.02	0.02	11.12
2. Industrial Processes	**197.67**	**210.40**	**227.09**	**366.32**	**250.23**	**278.23**	**296.79**	**288.75**	**251.57**	**519.83**	**632.25**	**5.58**
A. Mineral Products	189.63	202.80	214.92	353.40	237.87	265.66	282.22	280.01	242.00	508.55	631.77	7.81
B. Chemical Industry	NO	NO	NO	NO	NO	NO	NO	NO	NO	NO	NO	0.00
C. Metal Production	8.04	7.60	12.16	12.92	12.36	12.57	14.57	8.73	9.56	11.28	0.48	-96.29
D. Other Production	NA	NA	NA	NA	NA	NA	NA	NA	NA	NA	NA	0.00
G. Other	NO	NO	NO	NO	NO	NO	NO	NO	NO	NO	NO	0.00
3. Solvent and Other Product Use	42.46	30.54	23.45	29.68	32.59	43.38	59.22	39.28	22.52	40.60	36.35	-28.30
5. Land Use, Land-Use Change and Forestry(2)	**-19,059.66**	**-17,696.91**	**-18,310.33**	**-17,947.83**	**-18,188.59**	**-20,020.09**	**-18,789.31**	**-19,850.89**	**-20,062.07**	**-16,613.79**	**-17,349.54**	**-22.80**
A. Forest Land	-17,704.70	-16,348.23	-17,049.80	-16,777.75	-17,055.48	-18,927.31	-18,717.60	-20,119.73	-18,899.42	-15,789.12	-16,249.62	-29.56
B. Cropland	498.32	514.21	525.13	504.15	506.32	507.92	513.03	512.69	448.55	392.40	368.63	-38.86
C. Grassland	60.91	74.12	80.17	67.43	60.06	103.62	65.40	61.12	67.90	64.27	62.62	55.97
D. Wetlands	19.80	19.80	19.80	19.80	19.80	19.80	19.80	19.80	19.80	19.80	19.80	0.00
E. Settlements	469.02	513.19	557.36	601.54	645.71	689.88	734.06	778.23	825.10	855.87	883.03	744.25
F. Other Land	NE,NO	NE,NO	NE,NO	NE,NO	NE,NO	NE,NO	NE,NO	NE,NO	NE,NO	NE,NO	NE,NO	0.00
G. Other	-2,403.00	-2,470.00	-2,443.00	-2,363.00	-2,365.00	-2,414.00	-1,404.00	-1,103.00	-2,524.00	-2,157.00	-2,434.00	1,306.94
6. Waste	**2.34**	**0.30**	**0.37**	**0.44**	**0.44**	**1.51**	**1.18**	**0.50**	**0.34**	**0.34**	**0.33**	**100.00**
A. Solid Waste Disposal on Land	NA,NO	NA,NO	NA,NO	NA,NO	NA,NO	NA,NO	NA,NO	NA,NO	NA,NO	NA,NO	NA,NO	0.00
C. Waste Incineration	2.34	0.30	0.37	0.44	0.44	1.51	1.18	0.50	0.34	0.34	0.33	100.00
D. Other	NA	NA	NA	NA	NA	NA	NA	NA	NA	NA	NA	0.00
7. Other (as specified in Summary 1.A)	**NO**	**NO**	**NO**	**NO**	**NO**	**NO**	**NO**	**NO**	**NO**	**NO**	**NO**	**0.00**
Total CO2 emissions including net CO2 from LULUCF	**-11,647.56**	**-10,287.59**	**-10,676.50**	**-10,148.69**	**-10,398.74**	**-11,746.78**	**-10,160.09**	**-11,675.23**	**-12,628.41**	**-8,084.79**	**-9,261.49**	**169.81**
Total CO2 emissions excluding net CO2 from LULUCF	**7,412.10**	**7,409.32**	**7,633.83**	**7,799.15**	**7,789.85**	**8,273.31**	**8,629.23**	**8,175.66**	**7,433.66**	**8,529.00**	**8,088.05**	**-57.52**

GREENHOUSE GAS SOURCE AND SINK CATEGORIES	2001	2002	2003	2004	2005	2006	2007	2008	2009	2010	2011	Change from base to latest reported year
	(Gg)											%
Memo Items:												
International Bunkers	**697.07**	**733.88**	**714.90**	**788.19**	**1,003.69**	**825.81**	**810.74**	**950.79**	**1,181.67**	**1,156.28**	**1,038.54**	**-39.66**
Aviation	80.98	84.10	121.50	148.08	179.57	201.59	245.82	296.15	311.90	357.76	359.15	62.40
Marine	616.09	649.79	593.40	640.11	824.12	624.22	564.93	654.64	869.77	798.52	679.39	-54.71
Multilateral Operations	NO	NO	NO	NO	NO	NO	NO	NO	NO	NO	NO	0.00
CO2 Emissions from Biomass	4,800.70	4,775.71	5,077.49	5,354.66	5,361.72	5,395.88	5,280.87	5,002.76	5,723.20	5,663.29	5,244.40	76.94

N_2O

Years 1990-2000

GREENHOUSE GAS SOURCE AND SINK CATEGORIES	1990	1991	1992	1993	1994	1995	1996	1997	1998	1999	2000
	(Gg)										
1. Energy	**0.51**	**0.50**	**0.45**	**0.39**	**0.37**	**0.38**	**0.39**	**0.39**	**0.37**	**0.35**	**0.34**
A. Fuel Combustion (Sectoral Approach)	0.51	0.50	0.45	0.39	0.37	0.38	0.39	0.39	0.37	0.35	0.34
1. Energy Industries	0.05	0.04	0.04	0.04	0.04	0.04	0.04	0.04	0.04	0.03	0.03
2. Manufacturing Industries and Construction	0.03	0.02	0.02	0.02	0.02	0.02	0.02	0.02	0.02	0.02	0.02
3. Transport	0.27	0.26	0.22	0.16	0.15	0.15	0.15	0.16	0.15	0.14	0.15
4. Other Sectors	0.16	0.18	0.17	0.17	0.16	0.17	0.18	0.17	0.16	0.15	0.14
5. Other	NO	NO	NO	NO	NO	0.00	0.00	0.00	0.00	0.00	0.00
B. Fugitive Emissions from Fuels	NA,NO	NA,NO	NA,NO	NA,NO	NA,NO	NA,NO	NA,NO	NA,NO	NA,NO	NA,NO	NA,NO
1. Solid Fuels	NO	NO	NO	NO	NO	NO	NO	NO	NO	NO	NO
2. Oil and Natural Gas	NA,NO	NA,NO	NA,NO	NA,NO	NA,NO	NA,NO	NA,NO	NA,NO	NA,NO	NA,NO	NA,NO
2. Industrial Processes	**NA,NE, NO**	**NA,NE, NO**	**NA,NE, NO**	**IE,NA,NE,NO**	**IE,NA,NE,NO**	**IE,NA,NE,NO**	**IE,NA,NE,NO**	**IE,NA,NE,NO**	**IE,NA,NE,NO**	**IE,NA,NE,NO**	**IE,NA,NE,NO**
A. Mineral Products	NA,NE, NO	NA,NE, NO	NA,NE, NO	IE,NA,NE,NO	IE,NA,NE,NO	IE,NA,NE,NO	IE,NA,NE,NO	IE,NA,NE,NO	IE,NA,NE,NO	IE,NA,NE,NO	IE,NA,NE,NO
B. Chemical Industry	NO	NO	NO	NO	NO	NO	NO	NO	NO	NO	NO
C. Metal Production	NO	NO	NO	NO	NO	NO	NO	NO	NO	NO	NO
G. Other	NO	NO	NO	NO	NO	NO	NO	NO	NO	NO	NO
3. Solvent and Other Product Use	NA,NE, NO	NA,NE, NO	NA,NE, NO	NA,NE, NO	NA,NE, NO	0.01	0.02	0.02	0.01	0.01	0.01
4. Agriculture	**11.55**	**10.71**	**8.20**	**5.71**	**4.95**	**4.36**	**4.31**	**4.32**	**4.16**	**3.91**	**3.98**
B. Manure Management	1.84	1.76	1.42	0.88	0.75	0.75	0.69	0.65	0.60	0.53	0.52
D. Agricultural Soils	9.71	8.95	6.79	4.83	4.19	3.62	3.61	3.67	3.56	3.38	3.46
E. Prescribed Burning of Savannas	NA	NA	NA	NA	NA	NA	NA	NA	NA	NA	NA
F. Field Burning of Agricultural Residues	NO	NO	NO	NO	NO	NO	NO	NO	NO	NO	NO
G. Other	NO	NO	NO	NO	NO	NO	NO	NO	NO	NO	NO
5. Land Use, Land-Use Change and Forestry	**0.48**	**0.49**	**0.50**	**0.50**	**0.50**	**0.51**	**0.51**	**0.51**	**0.52**	**0.52**	**0.52**
A. Forest Land	0.47	0.47	0.48	0.47	0.47	0.48	0.48	0.48	0.48	0.48	0.48
B. Cropland	0.00	0.01	0.01	0.02	0.02	0.03	0.03	0.03	0.03	0.03	0.04
C. Grassland	IE,NO	IE,NO	IE,NO	0.00	0.00	0.00	0.00	0.00	0.00	0.00	0.00
D. Wetlands	0.00	0.00	0.00	0.00	0.00	0.00	0.00	0.00	0.00	0.00	0.00
E. Settlements	NE,NO	NE,NO	NE,NO	NE,NO	NE,NO	NE,NO	NE,NO	NE,NO	NE,NO	NE,NO	NE,NO
F. Other Land	NE	NE	NE	NE	NE	NE	NE	NE	NE	NE	NE
G. Other	NA,NE	NA,NE	NA,NE	NA,NE	NA,NE	NA,NE	NA,NE	NA,NE	NA,NE	NA,NE	NA,NE

GREENHOUSE GAS SOURCE AND SINK CATEGORIES	1990	1991	1992	1993	1994	1995	1996	1997	1998	1999	2000
	(Gg)										
6. Waste	**0.21**	**0.21**	**0.21**	**0.20**	**0.20**	**0.20**	**0.19**	**0.19**	**0.19**	**0.19**	**0.18**
B. Waste-water Handling	0.21	0.21	0.21	0.20	0.20	0.20	0.19	0.19	0.19	0.19	0.18
C. Waste Incineration	NO	NO	NO	NO	NA,NO	NA,NO	NA,NO	NA,NO	NA,NO	0.00	0.00
D. Other	NE	NE	NE	NE	NE	NE	NE	NE	NE	NE	NE
7. Other (as specified in Summary 1.A)	**NO**	**NO**	**NO**	**NO**	**NO**	**NO**	**NO**	**NO**	**NO**	**NO**	**NO**
Total N2O emissions including N2O from LULUCF	**12.75**	**11.91**	**9.36**	**6.80**	**6.02**	**5.46**	**5.41**	**5.43**	**5.25**	**4.98**	**5.04**
Total N2O emissions excluding N2O from LULUCF	**12.27**	**11.42**	**8.86**	**6.30**	**5.52**	**4.95**	**4.90**	**4.92**	**4.73**	**4.46**	**4.52**
Memo Items:											
International Bunkers	**0.19**	**0.04**	**0.04**	**0.06**	**0.11**	**0.05**	**0.04**	**0.03**	**0.02**	**0.02**	**0.01**
Aviation	0.01	0.01	0.00	0.00	0.00	0.00	0.00	0.00	0.00	0.00	0.00
Marine	0.18	0.03	0.03	0.06	0.11	0.04	0.03	0.03	0.02	0.01	0.01
Multilateral Operations	NO	NO	NO	NO	NO	NO	NO	NO	NO	NO	NO

Years 2001-2011

GREEN-HOUSE GAS SOURCE AND SINK CATEGORIES	2001	2002	2003	2004	2005	2006	2007	2008	2009	2010	2011	Change from base to latest reported year
	(Gg)											%
1. Energy	**0.37**	**0.37**	**0.40**	**0.42**	**0.42**	**0.41**	**0.42**	**0.40**	**0.40**	**0.39**	**0.39**	**-23.42**
A. Fuel Combustion (Sectoral Approach)	0.37	0.37	0.40	0.42	0.42	0.41	0.42	0.40	0.40	0.39	0.39	-23.42
1. Energy Industries	0.03	0.03	0.03	0.03	0.02	0.03	0.03	0.02	0.03	0.03	0.03	-44.27
2. Manufacturing Industries and Construction	0.02	0.02	0.02	0.02	0.03	0.03	0.03	0.03	0.04	0.05	0.06	122.87
3. Transport	0.16	0.17	0.19	0.20	0.20	0.19	0.20	0.19	0.16	0.16	0.17	-38.30
4. Other Sectors	0.16	0.15	0.16	0.17	0.17	0.16	0.17	0.16	0.17	0.16	0.14	-15.93
5. Other	0.00	0.00	0.00	0.00	0.00	0.00	0.00	0.00	0.00	0.00	0.00	100.00
B. Fugitive Emissions from Fuels	NA,NO	NA,NO	NA,NO	NA,NO	NA,NO	NA,NO	NA,NO	NA,NO	NA,NO	NA,NO	NA,NO	0.00
1. Solid Fuels	NO	NO	NO	NO	NO	NO	NO	NO	NO	NO	NO	0.00
2. Oil and Natural Gas	NA,NO	NA,NO	NA,NO	NA,NO	NA,NO	NA,NO	NA,NO	NA,NO	NA,NO	NA,NO	NA,NO	0.00
2. Industrial Processes	**IE,NA, NE,NO**	**IE,NA, NE,NO**	**IE,NA, NE,NO**	**IE,NA, NE,NO**	**IE,NA, NE,NO**	**IE,NA, NE,NO**	**IE,NA, NE,NO**	**IE,NA, NE,NO**	**IE,NA, NE,NO**	**IE,NA, NE,NO**	**IE,NA, NE,NO**	**0.00**
A. Mineral Products	IE,NA,NE, NO	IE,NA,NE, NO	IE,NA,NE, NO	IE,NA,NE, NO	IE,NA,NE	IE,NA,NE, NO	IE,NA,NE, NO	IE,NA,NE, NO	IE,NA,NE, NO	IE,NA,NE, NO	IE,NA,NE, NO	0.00
B. Chemical Industry	NO	NO	NO	NO	NO	NO	NO	NO	NO	NO	NO	0.00
C. Metal Production	NO	NO	NO	NO	NO	NO	NO	NO	NO	NO	NO	0.00
G. Other	NO	NO	NO	NO	NO	NO	NO	NO	NO	NO	NO	0.00
3. Solvent and Other Product Use	0.03	0.02	0.02	0.02	0.01	0.04	0.01	0.01	0.01	0.02	0.02	100.00
4. Agriculture	**4.32**	**4.21**	**4.44**	**4.35**	**4.57**	**4.56**	**4.75**	**4.72**	**4.83**	**5.03**	**5.01**	**-56.63**
B. Manure Management	0.54	0.54	0.51	0.49	0.50	0.47	0.48	0.45	0.45	0.42	0.39	-78.56
D. Agricultural Soils	3.78	3.68	3.93	3.86	4.08	4.09	4.27	4.26	4.38	4.62	4.61	-52.48
E. Prescribed Burning of Savannas	NA	NA	NA	NA	NA	NA	NA	NA	NA	NA	NA	0.00
F. Field Burning of Agricultural Residues	NO	NO	NO	NO	NO	NO	NO	NO	NO	NO	NO	0.00
G. Other	NO	NO	NO	NO	NO	NO	NO	NO	NO	NO	NO	0.00
5. Land Use, Land-Use Change and Forestry	**0.52**	**0.52**	**0.52**	**0.52**	**0.52**	**0.53**	**0.52**	**0.52**	**0.53**	**0.52**	**0.52**	**7.88**

GREEN-HOUSE GAS SOURCE AND SINK CATEGORIES	2001	2002	2003	2004	2005	2006	2007	2008	2009	2010	2011	Change from base to latest reported year
	(Gg)											%
A. Forest Land	0.47	0.48	0.47	0.47	0.47	0.48	0.47	0.47	0.47	0.47	0.47	-1.39
B. Cropland	0.04	0.04	0.04	0.04	0.04	0.05	0.05	0.05	0.05	0.05	0.04	833.61
C. Grassland	0.00	0.00	0.00	0.00	0.00	0.00	0.00	0.00	0.00	0.00	0.01	100.00
D. Wetlands	0.00	0.00	0.00	0.00	0.00	0.00	0.00	0.00	0.00	0.00	0.00	0.00
E. Settlements	NE,NO	NE,NO	NE,NO	NE,NO	NE,NO	NE,NO	NE,NO	NE,NO	NE,NO	NE,NO	NE,NO	0.00
F. Other Land	NE	NE	NE	NE	NE	NE	NE	NE	NE	NE	NE	0.00
G. Other	NA,NE	NA,NE	NA,NE	NA,NE	NA,NE	NA,NE	NA,NE	NA,NE	NA,NE	NA,NE	NA,NE	0.00
6. Waste	**0.19**	**0.18**	**0.18**	**0.18**	**0.18**	**0.18**	**0.18**	**0.18**	**0.18**	**0.18**	**0.17**	**-21.41**
B. Waste-water Handling	0.19	0.18	0.18	0.18	0.18	0.18	0.18	0.17	0.17	0.17	0.16	-24.77
C. Waste Incineration	0.00	0.00	0.00	0.00	0.00	0.00	0.00	0.00	0.00	0.00	0.00	100.00
D. Other	NE	NE	0.00	0.00	0.00	0.00	0.00	0.00	0.00	0.01	0.01	100.00
7. Other (as specified in Summary 1.A)	**NO**	**NO**	**NO**	**NO**	**NO**	**NO**	**NO**	**NO**	**NO**	**NO**	**NO**	**0.00**
Total N2O emissions including N2O from LULUCF	**5.41**	**5.31**	**5.57**	**5.49**	**5.71**	**5.72**	**5.89**	**5.83**	**5.95**	**6.15**	**6.10**	**-52.16**
Total N2O emissions excluding N2O from LULUCF	**4.90**	**4.79**	**5.05**	**4.97**	**5.19**	**5.19**	**5.36**	**5.31**	**5.42**	**5.62**	**5.58**	**-54.51**
Memo Items:												
International Bunkers	**0.14**	**0.12**	**0.11**	**0.11**	**0.13**	**0.10**	**0.09**	**0.08**	**0.11**	**0.12**	**0.12**	**-36.15**
Aviation	0.00	0.00	0.00	0.00	0.01	0.01	0.01	0.01	0.01	0.01	0.01	96.19
Marine	0.14	0.12	0.10	0.11	0.13	0.09	0.09	0.07	0.10	0.10	0.11	-40.66
Multilateral Operations	NO	NO	NO	NO	NO	NO	NO	NO	NO	NO	NO	0.00

CH_4

Years 1990-2000

GREENHOUSE GAS SOURCE AND SINK CATEGORIES	1990	1991	1992	1993	1994	1995	1996	1997	1998	1999	2000
	(Gg)										
1. Energy	27.91	28.80	26.42	26.56	26.35	26.52	26.51	25.13	23.87	23.16	21.85
A. Fuel Combustion (Sectoral Approach)	12.52	13.89	12.61	13.23	13.08	13.53	13.90	13.20	12.31	12.02	11.34
1. Energy Industries	0.27	0.26	0.25	0.24	0.24	0.23	0.25	0.29	0.28	0.23	0.22
2. Manufacturing Industries and Construction	0.26	0.19	0.17	0.18	0.17	0.17	0.18	0.17	0.18	0.17	0.16
3. Transport	0.78	0.72	0.69	0.67	0.63	0.58	0.55	0.52	0.49	0.47	0.49
4. Other Sectors	11.20	12.71	11.50	12.15	12.04	12.56	12.92	12.22	11.36	11.15	10.47
5. Other	NO	NO	NO	NO	NO	0.00	0.00	0.00	0.00	0.00	0.00
B. Fugitive Emissions from Fuels	15.39	14.91	13.81	13.33	13.27	12.99	12.61	11.93	11.55	11.13	10.51
1. Solid Fuels	NO	NO	NO	NO	NO	NO	NO	NO	NO	NO	NO
2. Oil and Natural Gas	15.39	14.91	13.81	13.33	13.27	12.99	12.61	11.93	11.55	11.13	10.51
2. Industrial Processes	**0.00**	**0.00**	**0.00**	**0.00**	**0.00**	**0.00**	**0.00**	**0.00**	**0.00**	**0.00**	**0.00**
A. Mineral Products	NA,NE, NO	NA,NE, NO	NA,NE, NO	IE,NA, NE,NO	IE,NA, NE,NO	IE,NA, NE,NO	IE,NA, NE,NO	IE,NA, NE,NO	IE,NA, NE,NO	IE,NA, NE,NO	IE,NA, NE,NO
B. Chemical Industry	NO	NO	NO	NO	NO	NO	NO	NO	NO	NO	NO
C. Metal Production	0.00	0.00	0.00	0.00	0.00	0.00	0.00	0.00	0.00	0.00	0.00
G. Other	NO	NO	NO	NO	NO	NO	NO	NO	NO	NO	NO

GREENHOUSE GAS SOURCE AND SINK CATEGORIES	1990	1991	1992	1993	1994	1995	1996	1997	1998	1999	2000
	(Gg)										
4. Agriculture	**115.32**	**109.93**	**89.57**	**55.58**	**47.49**	**46.62**	**44.15**	**43.34**	**40.09**	**34.90**	**34.12**
A. Enteric Fermentation	102.29	97.81	80.50	50.18	42.57	41.51	39.55	38.94	35.94	31.10	30.89
B. Manure Management	13.04	12.12	9.07	5.40	4.92	5.11	4.59	4.41	4.15	3.79	3.23
C. Rice Cultivation	NO	NO	NO	NO	NO	NO	NO	NO	NO	NO	NO
D. Agricultural Soils	NA	NA	NA	NA	NA	NA	NA	NA	NA	NA	NA
E. Prescribed Burning of Savannas	NA	NA	NA	NA	NA	NA	NA	NA	NA	NA	NA
F. Field Burning of Agricultural Residues	NO	NO	NO	NO	NO	NO	NO	NO	NO	NO	NO
G. Other	NO	NO	NO	NO	NO	NO	NO	NO	NO	NO	NO
5. Land Use, Land-Use Change and Forestry	**0.92**	**1.07**	**1.80**	**1.21**	**1.39**	**1.72**	**1.73**	**2.21**	**2.46**	**2.77**	**2.80**
A. Forest Land	0.92	1.07	1.80	1.21	1.39	1.72	1.73	2.21	2.45	2.76	2.80
B. Cropland	NO	NO	NO	NO	NO	NO	NO	NO	NO	NO	NO
C. Grassland	IE,NO	IE,NO	IE,NO	0.00	0.00	0.00	0.00	0.00	0.00	0.01	0.01
D. Wetlands	IE,NE, NO	IE,NE, NO	IE,NE, NO	IE,NE, NO	IE,NE, NO	IE,NE, NO	IE,NE, NO	IE,NE, NO	IE,NE, NO	IE,NE, NO	IE,NE, NO
E. Settlements	NE,NO	NE,NO	NE,NO	NE,NO	NE,NO	NE,NO	NE,NO	NE,NO	NE,NO	NE,NO	NE,NO
F. Other Land	NE	NE	NE	NE	NE	NE	NE	NE	NE	NE	NE
G. Other	NA,NE	NA,NE	NA,NE	NA,NE	NA,NE	NA,NE	NA,NE	NA,NE	NA,NE	NA,NE	NA,NE
6. Waste	**22.36**	**22.83**	**22.81**	**22.22**	**22.10**	**22.15**	**22.25**	**22.51**	**22.66**	**22.96**	**23.25**
A. Solid Waste Disposal on Land	15.71	16.29	16.76	17.13	17.40	17.57	17.78	18.05	18.37	18.74	19.15
B. Waste-water Handling	6.65	6.53	6.04	5.09	4.70	4.58	4.47	4.46	4.29	4.23	4.10
C. Waste Incineration	NO	NO	NO	NO	NO	NO	NO	NO	NO	NA,NO	NA,NO
D. Other	NE	NE	NE	NE	NE	NE	NE	NE	NE	NE	NE
7. Other (as specified in Summary 1.A)	**NO**	**NO**	**NO**	**NO**	**NO**	**NO**	**NO**	**NO**	**NO**	**NO**	**NO**
Total CH4 emissions including CH4 from LULUCF	**166.52**	**162.63**	**140.61**	**105.58**	**97.33**	**97.02**	**94.64**	**93.19**	**89.07**	**83.79**	**82.03**
Total CH4 emissions excluding CH4 from LULUCF	**165.60**	**161.56**	**138.80**	**104.37**	**95.94**	**95.30**	**92.90**	**90.98**	**86.61**	**81.02**	**79.23**
Memo Items:											
International Bunkers	0.10	0.03	0.04	0.04	0.06	0.03	0.02	0.01	0.00	0.00	0.00
Aviation	0.00	0.00	0.00	0.00	0.00	0.00	0.00	0.00	0.00	0.00	0.00
Marine	0.09	0.03	0.04	0.04	0.06	0.03	0.02	0.01	0.00	0.00	0.00
Multilateral Operations	NO	NO	NO	NO	NO	NO	NO	NO	NO	NO	NO
CO2 Emissions from Biomass											

Years 2001-2011

GREEN-HOUSE GAS SOURCE AND SINK CATEGORIES	2001	2002	2003	2004	2005	2006	2007	2008	2009	2010	2011	Change from base to latest reported year
	(Gg)											%
1. Energy	22.77	22.48	21.25	21.29	21.03	19.68	19.68	18.17	19.48	18.88	15.10	-45.91
A. Fuel Combustion (Sectoral	12.51	12.22	12.76	13.11	13.09	12.75	12.70	11.74	12.85	12.17	10.55	-15.70

GREEN-HOUSE GAS SOURCE AND SINK CATEGORIES	2001	2002	2003	2004	2005	2006	2007	2008	2009	2010	2011	Change from base to latest reported year
	(Gg)											%
Approach)												
1. Energy Industries	0.21	0.22	0.23	0.21	0.18	0.20	0.19	0.19	0.19	0.21	0.20	-28.58
2. Manufacturing Industries and Construction	0.20	0.19	0.19	0.23	0.26	0.29	0.27	0.28	0.33	0.40	0.46	74.77
3. Transport	0.54	0.50	0.48	0.45	0.39	0.37	0.34	0.28	0.24	0.23	0.21	-73.28
4. Other Sectors	11.55	11.31	11.87	12.22	12.25	11.89	11.89	10.99	12.09	11.33	9.69	-13.48
5. Other	0.00	0.00	0.00	0.00	0.00	0.00	0.00	0.00	0.00	0.00	0.00	100.00
B. Fugitive Emissions from Fuels	10.26	10.26	8.49	8.19	7.94	6.93	6.98	6.43	6.62	6.71	4.54	-70.48
1. Solid Fuels	NO	NO	NO	NO	NO	NO	NO	NO	NO	NO	NO	0.00
2. Oil and Natural Gas	10.26	10.26	8.49	8.19	7.94	6.93	6.98	6.43	6.62	6.71	4.54	-70.48
2. Industrial Processes	**0.00**	**0.00**	**0.00**	**0.00**	**0.00**	**0.00**	**0.00**	**0.00**	**0.00**	**0.00**	**0.00**	**-69.53**
A. Mineral Products	IE,NA, NE,NO	IE,NA, NE,NO	IE,NA, NE,NO	IE,NA, NE,NO	IE,NA,NE	IE,NA, NE,NO	IE,NA, NE,NO	IE,NA, NE,NO	IE,NA, NE,NO	IE,NA, NE,NO	IE,NA,NE,NO	0.00
B. Chemical Industry	NO	NO	NO	NO	NO	NO	NO	NO	NO	NO	NO	0.00
C. Metal Production	0.00	0.00	0.00	0.00	0.00	0.00	0.00	0.00	0.00	0.00	0.00	-69.53
G. Other	NO	NO	NO	NO	NO	NO	NO	NO	NO	NO	NO	0.00
4. Agriculture	**36.06**	**35.86**	**34.99**	**34.63**	**35.76**	**35.68**	**37.28**	**36.04**	**35.85**	**36.24**	**36.33**	**-68.50**
A. Enteric Fermentation	32.51	32.27	31.46	31.07	32.10	31.75	33.21	32.04	31.79	32.01	32.10	-68.62
B. Manure Management	3.56	3.58	3.53	3.56	3.66	3.93	4.07	4.00	4.05	4.23	4.23	-67.57
C. Rice Cultivation	NO	NO	NO	NO	NO	NO	NO	NO	NO	NO	NO	0.00
D. Agricultural Soils	NA	NA	NA	NA	NA	NA	NA	NA	NA	NA	NA	0.00
E. Prescribed Burning of Savannas	NA	NA	NA	NA	NA	NA	NA	NA	NA	NA	NA	0.00
F. Field Burning of Agricultural Residues	NO	NO	NO	NO	NO	NO	NO	NO	NO	NO	NO	0.00
G. Other	NO	NO	NO	NO	NO	NO	NO	NO	NO	NO	NO	0.00
5. Land Use, Land-Use Change and Forestry	**1.57**	**1.90**	**1.80**	**1.63**	**1.66**	**1.82**	**1.49**	**1.34**	**1.63**	**1.93**	**0.45**	**-50.73**
A. Forest Land	1.56	1.88	1.76	1.61	1.65	1.76	1.48	1.34	1.62	1.92	0.45	-51.16
B. Cropland	NO	NO	NO	NO	NO	NO	NO	NO	NO	NO	NO	0.00
C. Grassland	0.01	0.03	0.03	0.02	0.01	0.06	0.01	0.00	0.01	0.01	0.00	100.00
D. Wetlands	IE,NE, NO	IE,NE, NO	IE,NE, NO	IE,NE, NO	IE,NE ,NO	IE,NE, NO	IE,NE, NO	IE,NE, NO	IE,NE, NO	IE,NE, NO	IE,NE,NO	0.00
E. Settlements	NE,NO	NE,NO	NE,NO	NE,NO	NE,N O	NE,NO	NE,NO	NE,NO	NE,NO	NE,NO	NE,NO	0.00
F. Other Land	NE	NE	NE	NE	NE	NE	NE	NE	NE	NE	NE	0.00
G. Other	NA,NE	NA,NE	NA,NE	NA,NE	NA,N E	NA,NE	NA,NE	NA,NE	NA,NE	NA,NE	NA,NE	0.00
6. Waste	**24.54**	**24.44**	**22.47**	**22.40**	**22.46**	**22.71**	**23.34**	**24.72**	**24.68**	**24.74**	**23.83**	**6.58**
A. Solid Waste Disposal on	19.62	19.51	17.88	17.09	17.63	18.38	19.36	20.16	20.35	20.73	20.91	33.04

GREEN-HOUSE GAS SOURCE AND SINK CATEGORIES	2001	2002	2003	2004	2005	2006	2007	2008	2009	2010	2011	Change from base to latest reported year
	(Gg)											%
Land												
B. Waste-water Handling	4.93	4.92	4.58	5.27	4.81	4.28	3.94	4.52	4.27	3.94	2.83	-57.41
C. Waste Incineration	NA,NO	NA,NO	NA,NO	NA,NO	NA,NO	NA,NO	NA,NO	NA,NO	NA,NO	NA,NO	NA,NO	0.00
D. Other	NE	NE	0.01	0.03	0.03	0.05	0.04	0.04	0.06	0.07	0.09	100.00
7. Other (as specified in Summary 1.A)	**NO**	**NO**	**NO**	**NO**	**NO**	**NO**	**NO**	**NO**	**NO**	**NO**	**NO**	**0.00**
Total CH4 emissions including CH4 from LULUCF	**84.95**	**84.68**	**80.52**	**79.95**	**80.92**	**79.90**	**81.79**	**80.27**	**81.64**	**81.79**	**75.71**	**-54.53**
Total CH4 emissions excluding CH4 from LULUCF	**83.38**	**82.77**	**78.72**	**78.32**	**79.26**	**78.07**	**80.29**	**78.93**	**80.01**	**79.87**	**75.26**	**-54.55**
Memo Items:												
International Bunkers	0.04	0.04	0.04	0.04	0.05	0.04	0.04	0.04	0.06	0.05	0.05	-52.41
Aviation	0.00	0.00	0.00	0.00	0.00	0.00	0.00	0.00	0.00	0.00	0.00	136.50
Marine	0.04	0.04	0.04	0.04	0.05	0.04	0.03	0.04	0.05	0.05	0.04	-55.50
Multilateral Operations	NO	NO	NO	NO	NO	NO	NO	NO	NO	NO	NO	0.00

HFC, PFC, SF_6

Years 1990-2000

GREENHOUSE GAS SOURCE AND SINK CATEGORIES	1990	1991	1992	1993	1994	1995	1996	1997	1998	1999	2000
	(Gg)										
Emissions of HFCs(3) - (Gg CO2 equivalent)	**IE,NA,NE, NO**	**IE,NA,NE, NO**	**IE,NA,NE, NO**	**IE,NA,NE, NO**	**IE,NA,NE, NO**	**0.64**	**0.84**	**1.93**	**2.86**	**3.28**	**5.12**
HFC-23	NA,NE,NO	NA,NE, NO	NA,NE,NO	NA,NE,NO	NE,NO	0.00	0.00	0.00	0.00	0.00	0.00
HFC-32	NA,NE,NO	NA,NE,NO	NA,NE,NO	NA,NE,NO	NE,NO	NE, NO	NE, NO	NE, NO	NE, NO	NE, NO	NE, NO
HFC-41	NA,NO	NA,NO	NA,NO	NA,NO	NA,NO	NE, NO	NE, NO	NE, NO	NE, NO	NE, NO	NE, NO
HFC-43-10mee	NA,NO	NA,NO	NA,NO	NA,NO	NA,NO	NE, NO	NE, NO	NE, NO	NE, NO	NE, NO	NE, NO
HFC-125	NA,NE,NO	NA,NE,NO	NA,NE,NO	NA,NE,NO	NE,NO	NE, NO	NE, NO	NE, NO	NE, NO	NE, NO	NE, NO
HFC-134	NA,NO	NA,NO	NA,NO	NA,NO	NA,NO	NE, NO	NE, NO	NE, NO	NE, NO	NE, NO	NE, NO
HFC-134a	IE,NA, NE,NO	IE,NA, NE,NO	IE,NA, NE,NO	IE,NA, NE,NO	IE,NE,NO	0.00	0.00	0.00	0.00	0.00	0.00
HFC-152a	NA,NO	NA,NO	NA,NO	NA,NO	NO	NE, NO	NE, NO	NE, NO	NE, NO	NE, NO	NE, NO
HFC-143	NA,NO	NA,NO	NA,NO	NA,NO	NA,NO	NE, NO	NE, NO	NE, NO	NE, NO	NE, NO	NE, NO
HFC-143a	NA,NE,NO	NA,NE,NO	NA,NE,NO	NA,NE,NO	NE,NO	NE, NO	NE, NO	NE, NO	NE, NO	NE, NO	NE, NO
HFC-227ea	NA,NE,NO	NA,NE,NO	NA,NE,NO	NA,NE,NO	NA,NE,NO	NE, NO	NE, NO	NE, NO	NE, NO	NE, NO	NE, NO
HFC-236fa	NA,NO	NA,NO	NA,NO	NA,NO	NA,NO	NE, NO	NE, NO	NE, NO	NE, NO	NE, NO	NE, NO

GREENHOUSE GAS SOURCE AND SINK CATEGORIES	1990	1991	1992	1993	1994	1995	1996	1997	1998	1999	2000
	(Gg)										
HFC-245ca	NA,NO	NA,NO	NA,NO	NA,NO	NA,NO	NE, NO	NE, NO	NE, NO	NE, NO	NE, NO	NE, NO
Unspecified mix of listed HFCs(4) - (Gg CO2 equivalent)	NA,NO	NA,NO	NA,NO	NA,NO	NA,NO	NE, NO	NE, NO	NE, NO	NE, NO	NE, NO	NE, NO
Emissions of PFCs(3) - (Gg CO2 equivalent)	**NA,NO**	**NA,NO**	**NA,NO**	**NA,NO**	**NA,NO**	**NA, NO**	**NA, NO**	**NA, NO**	**NA, NO**	**NA, NO**	**NA, NO**
CF4	NA,NO	NA,NO	NA,NO	NA,NO	NA,NO	NO	NO	NO	NO	NO	NO
C2F6	NA,NO	NA,NO	NA,NO	NA,NO	NA,NO	NO	NO	NO	NO	NO	NO
C 3F8	NA,NO	NA,NO	NA,NO	NA,NO	NA,NO	NO	NO	NO	NO	NO	NO
C4F10	NA,NO	NA,NO	NA,NO	NA,NO	NA,NO	NO	NO	NO	NO	NO	NO
c-C4F8	NA,NO	NA,NO	NA,NO	NA,NO	NA,NO	NO	NO	NO	NO	NO	NO
C5F12	NA,NO	NA,NO	NA,NO	NA,NO	NA,NO	NO	NO	NO	NO	NO	NO
C6F14	NA,NO	NA,NO	NA,NO	NA,NO	NA,NO	NO	NO	NO	NO	NO	NO
Unspecified mix of listed PFCs(4) - (Gg CO2 equivalent)	NA,NO	NA,NO	NA,NO	NA,NO	NA,NO	NO	NO	NO	NO	NO	NO
Emissions of SF6(3) - (Gg CO2 equivalent)	**NA,NE,NO**	**NA,NE,NO**	**NA,NE,NO**	**NA,NE,NO**	**NA,NE,NO**	**0.25**	**0.29**	**0.51**	**0.71**	**0.98**	**1.28**
SF6	NA,NE,NO	NA,NE,NO	NA,NE,NO	NA,NE,NO	NA,NE,NO	0.00	0.00	0.00	0.00	0.00	0.00

Years 2001-2011

GREENHOUSE GAS SOURCE AND SINK CATEGORIES	2001	2002	2003	2004	2005	2006	2007	2008	2009	2010	2011	Change from base to latest reported year
	(Gg)	(Gg)	(Gg)	(Gg)	(Gg)	(Gg)	(Gg)	(Gg)	(Gg)	(Gg)	(Gg)	%
Emissions of HFCs(3) - (Gg CO2 equivalent)	**7.59**	**9.87**	**15.72**	**18.10**	**28.39**	**62.64**	**98.66**	**72.96**	**74.48**	**72.32**	**82.97**	**100.00**
HFC-23	0.00	0.00	0.00	IE,NE, NO	IE,NO	IE,NO	IE,NO	0.00	0.00	0.00	0.00	100.00
HFC-32	NE,NO	NE,NO	NE,NO	0.00	0.00	0.00	0.00	0.00	0.00	0.00	0.00	100.00
HFC-41	NE,NO	NE,NO	NO	NO	NO	NO	NO	NO	NO	NO	NO	0.00
HFC-43-10mee	NE,NO	NE,NO	NO	NO	NO	NO	NO	NO	NO	NO	NO	0.00
HFC-125	NE,NO	NE,NO	NE,NO	0.00	0.00	0.00	0.00	0.00	0.00	0.00	0.00	100.00
HFC-134	NE,NO	NE,NO	NO	NO	NO	NO	NO	NO	NO	NO	NO	0.00
HFC-134a	0.01	0.01	0.01	0.01	0.02	0.04	0.07	0.04	0.04	0.04	0.04	100.00
HFC-152a	NE,NO	NE,NO	0.00	0.00	0.00	0.00	0.00	0.00	0.00	0.00	0.00	100.00
HFC-143	NE,NO	NE,NO	NO	NO	NO	NO	NO	NO	NO	NO	NO	0.00

GREENHOUSE GAS SOURCE AND SINK CATEGORIES	2001	2002	2003	2004	2005	2006	2007	2008	2009	2010	2011	Change from base to latest reported year
	(Gg)	(Gg)	(Gg)	(Gg)	(Gg)	(Gg)	(Gg)	(Gg)	(Gg)	(Gg)	(Gg)	%
HFC-143a	NE,NO	NE,NO	NE,NO	0.00	0.00	0.00	0.00	0.00	0.00	0.00	0.00	100.00
HFC-227ea	0.00	0.00	0.00	0.00	0.00	0.00	0.00	0.00	0.00	0.00	0.00	100.00
HFC-236fa	NE,NO	NE,NO	NO	NO	NO	NO	NO	NO	NO	NO	NO	0.00
HFC-245ca	NE,NO	NE,NO	NO	NO	NO	NO	NO	NO	NO	NO	NO	0.00
Unspecified mix of listed HFCs(4) - (Gg CO2 equivalent)	NE,NO	NE,NO	NO	NO	NO	NO	NO	NO	NO	NO	NO	0.00
Emissions of PFCs(3) - (Gg CO2 equivalent)	**NA,NO**	**NA,NO**	**NA,NO**	**NA,NO**	**NA,NO**	**NA,NO**	**NA,NO**	**NA,NO**	**NA,NO**	**NA,NO**	**NA,NO**	**0.00**
CF4	NO	NO	NO	NO	NO	NO	NO	NO	NO	NO	NO	0.00
C2F6	NO	NO	NO	NO	NO	NO	NO	NO	NO	NO	NO	0.00
C 3F8	NO	NO	NO	NO	NO	NO	NO	NO	NO	NO	NO	0.00
C4F10	NO	NO	NO	NO	NO	NO	NO	NO	NO	NO	NO	0.00
c-C4F8	NO	NO	NO	NO	NO	NO	NO	NO	NO	NO	NO	0.00
C5F12	NO	NO	NO	NO	NO	NO	NO	NO	NO	NO	NO	0.00
C6F14	NO	NO	NO	NO	NO	NO	NO	NO	NO	NO	NO	0.00
Unspecified mix of listed PFCs(4) - (Gg CO2 equivalent)	NO	NO	NO	NO	NO	NO	NO	NO	NO	NO	NO	0.00
Emissions of SF6(3) - (Gg CO2 equivalent)	**1.98**	**3.38**	**4.41**	**5.37**	**7.53**	**7.12**	**8.60**	**10.08**	**13.53**	**13.13**	**12.45**	**100.00**
SF6	0.00	0.00	0.00	0.00	0.00	0.00	0.00	0.00	0.00	0.00	0.00	100.00

A.6.3: Supplementary information under Article 6., 12., 17

In 2012 one Joint Implementation Project (Article 6) was registered in Latvia – The Liepaja Regional Solid Waste Management Project. The proposed Liepaja Regional Solid Waste Management Project introduces a state-of-the-art waste management system to the Liepaja Waste Management Region including remediation of the existing landfill sites and the operation of energy cells for methane capture and utilization. There are two basic sources of GHG emission reductions from the project – CH_4 and CO_2. Methane Capture and Combustion or Flare (Direct Effects): The captured methane at the Grobina and Skede Sites from the sanitary landfill gas collection system is destroyed by either combustion or flaring, thereby reducing GHGs that would otherwise be emitted into the atmosphere. Electric Generation Displacement (Direct Effects): Carbon dioxide emissions also are reduced by the project through the displacement of grid-based electricity by the landfill methane-based electricity produced at Grobina and Skede.

There are no Clean Development Mechanism (Article 12) projects in Latvia.

There are no specific limitation rules for the operators and/or person accounts in Latvia's of holding of Kyoto protocol units with exception of AAUs that could be held only in the National Holding Account.

The list given below includes the legal entities that have active accounts in Latvia's ETR at the end of 2011 and doesn't include accounts that were closed after the compliance period 30/04/2012 (the GHG permits of the installation were permitted at the end of 2011).

Legal entities authorised to participate in the mechanisms under Articles 6, 12 and 17 of the Kyoto Protocol

Legal entities authorised to participate in the mechanisms under Article 6, 12 and 17u of the Kyoto Protocol)	Account ID	Role
A/S "Olaines udens un siltums"	LV-HOLDING_ACCOUNT-5012073-0-4	Latvia's ETR operator (obligatory participation)
Pasvaldibas SIA "Ventspils siltums"	LV-HOLDING_ACCOUNT-5012074-0-96	Latvia's ETR operator (obligatory participation)
Pasvaldibas SIA "Ventspils siltums"	LV-HOLDING_ACCOUNT-5012075-0-91	Latvia's ETR operator (obligatory participation)
AS "Latvenergo" TEC-1	LV-HOLDING_ACCOUNT-5012078-0-76	Latvia's ETR operator (obligatory participation)
AS "Latvenergo" TEC-2	LV-HOLDING_ACCOUNT-5012079-0-71	Latvia's ETR operator (obligatory participation)
SIA "Fortum Jelgava"	LV-HOLDING_ACCOUNT-5012080-0-66	Latvia's ETR operator (obligatory participation)
SIA "Fortum Jelgava"	LV-HOLDING_ACCOUNT-5012081-0-61	Latvia's ETR operator (obligatory participation)

Legal entities authorised to participate in the mechanisms under Article 6, 12 and 17u of the Kyoto Protocol)	Account ID	Role
SIA "Livanu siltums"	LV-HOLDING_ACCOUNT-5012084-0-46	Latvia's ETR operator (obligatory participation)
SIA "Aizkraukles siltums"	LV-HOLDING_ACCOUNT-5012085-0-41	Latvia's ETR operator (obligatory participation)
A/S "Rigas siltums" katlu maja Gobas iela 33a	LV-HOLDING_ACCOUNT-5012086-0-36	Latvia's ETR operator (obligatory participation)
A/S "Rigas siltums" siltumcentrale Daugavgriva	LV-HOLDING_ACCOUNT-5012087-0-31	Latvia's ETR operator (obligatory participation)
A/S "Rigas siltums" siltumcentrale Vecmilgravis	LV-HOLDING_ACCOUNT-5012088-0-26	Latvia's ETR operator (obligatory participation)
A/S "Rigas siltums" siltumcentrale Ziepniekkalns	LV-HOLDING_ACCOUNT-5012089-0-21	Latvia's ETR operator (obligatory participation)
A/S "Rigas siltums" iecirknis Zasulauks	LV-HOLDING_ACCOUNT-5012090-0-16	Latvia's ETR operator (obligatory participation)
A/S "Rigas siltums" siltumcentrale Imanta	LV-HOLDING_ACCOUNT-5012091-0-11	Latvia's ETR operator (obligatory participation)
SIA "Dobeles energija"	LV-HOLDING_ACCOUNT-5012092-0-6	Latvia's ETR operator (obligatory participation)
Ogres novada PA "Malkalne"	LV-HOLDING_ACCOUNT-5012093-0-98	Latvia's ETR operator (obligatory participation)
SIA "Wesemann Sigulda"	LV-HOLDING_ACCOUNT-5012094-0-93	Latvia's ETR operator (obligatory participation)
SIA "Jurmalas siltums" Dubulti	LV-HOLDING_ACCOUNT-5012096-0-83	Latvia's ETR operator (obligatory participation)
SIA "Jurmalas siltums" Kauguri	LV-HOLDING_ACCOUNT-5012097-0-78	Latvia's ETR operator (obligatory participation)
A/S "Cesvaines piens"	LV-HOLDING_ACCOUNT-5012100-0-63	Latvia's ETR operator (obligatory participation)
SIA "Rigas laku un krasu rupnica"	LV-HOLDING_ACCOUNT-5012101-0-58	Latvia's ETR operator (obligatory participation)
A/s "Putnu fabrika Kekava""	LV-HOLDING_ACCOUNT-5012102-0-53	Latvia's ETR operator (obligatory participation)
A/S "Rigas kugu buvetava"	LV-HOLDING_ACCOUNT-5012103-0-48	Latvia's ETR operator (obligatory participation)
A/S "BLB Baltijas Terminals"	LV-HOLDING_ACCOUNT-5012104-0-43	Latvia's ETR operator (obligatory participation)
SIA "Kraslavas nami"	LV-HOLDING_ACCOUNT-5012106-0-33	Latvia's ETR operator (obligatory participation)
SIA "Cesu siltumtikli"	LV-HOLDING_ACCOUNT-5012108-0-23	Latvia's ETR operator (obligatory participation)
SIA "Tukuma siltums"	LV-HOLDING_ACCOUNT-5012109-0-18	Latvia's ETR operator (obligatory participation)
PAS "Daugavpils siltumtikli" SC3	LV-HOLDING_ACCOUNT-5012110-0-13	Latvia's ETR operator (obligatory participation)
PAS "Daugavpils siltumtikli" SC1	LV-HOLDING_ACCOUNT-5012111-0-8	Latvia's ETR operator (obligatory participation)
PAS "Daugavpils siltumtikli" SC2	LV-HOLDING_ACCOUNT-5012112-0-3	Latvia's ETR operator (obligatory participation)
A/S "Ligija teks"	LV-HOLDING_ACCOUNT-5012113-0-95	Latvia's ETR operator (obligatory participation)

Legal entities authorised to participate in the mechanisms under Article 6, 12 and 17u of the Kyoto Protocol)	Account ID	Role
SIA "Jekabpils siltums"	LV-HOLDING_ACCOUNT-5012114-0-90	Latvia's ETR operator (obligatory participation)
A/S "Valmieras piens"	LV-HOLDING_ACCOUNT-5012117-0-75	Latvia's ETR operator (obligatory participation)
SIA "Lauma Fabrics"	LV-HOLDING_ACCOUNT-5012119-0-65	Latvia's ETR operator (obligatory participation)
SIA "Liepajas energija"	LV-HOLDING_ACCOUNT-5012120-0-60	Latvia's ETR operator (obligatory participation)
SIA "Liepajas energija"	LV-HOLDING_ACCOUNT-5012121-0-55	Latvia's ETR operator (obligatory participation)
A/S "Preilu siers"	LV-HOLDING_ACCOUNT-5012122-0-50	Latvia's ETR operator (obligatory participation)
SIA "Ogres Trikotaza"	LV-HOLDING_ACCOUNT-5012123-0-45	Latvia's ETR operator (obligatory participation)
SIA "Salaspils siltums"	LV-HOLDING_ACCOUNT-5012124-0-40	Latvia's ETR operator (obligatory participation)
A/S "Latvijas finieris" rupnica "Furniers"	LV-HOLDING_ACCOUNT-5012125-0-35	Latvia's ETR operator (obligatory participation)
A/S "Latvijas Finieris" rupnica "Lignums"	LV-HOLDING_ACCOUNT-5012126-0-30	Latvia's ETR operator (obligatory participation)
SIA "Sabiedriba Marupe"	LV-HOLDING_ACCOUNT-5012127-0-25	Latvia's ETR operator (obligatory participation)
A/S "Balticovo"	LV-HOLDING_ACCOUNT-5012128-0-20	Latvia's ETR operator (obligatory participation)
A/S "Ventbunkers"	LV-HOLDING_ACCOUNT-5012129-0-15	Latvia's ETR operator (obligatory participation)
SIA "Papirfabrika Ligatne"	LV-HOLDING_ACCOUNT-5012130-0-10	Latvia's ETR operator (obligatory participation)
SIA "Saulkalne S"	LV-HOLDING_ACCOUNT-5012131-0-5	Latvia's ETR operator (obligatory participation)
SIA "Brocenu keramika"	LV-HOLDING_ACCOUNT-5012132-0-97	Latvia's ETR operator (obligatory participation)
A/S "Valmieras stikla skiedra"	LV-HOLDING_ACCOUNT-5012133-0-92	Latvia's ETR operator (obligatory participation)
LODE SIA, Liepas plant	LV-HOLDING_ACCOUNT-5012135-0-82	Latvia's ETR operator (obligatory participation)
A/S "Liepajas metalurgs"	LV-HOLDING_ACCOUNT-5012137-0-72	Latvia's ETR operator (obligatory participation)
LODE SIA, Livani plant	LV-HOLDING_ACCOUNT-5012138-0-67	Latvia's ETR operator (obligatory participation)
SIA "Ceplis"	LV-HOLDING_ACCOUNT-5012140-0-57	Latvia's ETR operator (obligatory participation)
LODE SIA, Ane plant	LV-HOLDING_ACCOUNT-5012141-0-52	Latvia's ETR operator (obligatory participation)
SIA "Jurmalas siltums" Plieksana 80	LV-HOLDING_ACCOUNT-5012142-0-47	Latvia's ETR operator (obligatory participation)
SIA "Jurmalas siltums" Aizputes 1d	LV-HOLDING_ACCOUNT-5012143-0-42	Latvia's ETR operator (obligatory participation)
SIA "Olaines kimiska rupnica "BIOLARS""	LV-HOLDING_ACCOUNT-5012154-0-84	Latvia's ETR operator (obligatory participation)

Legal entities authorised to participate in the mechanisms under Article 6, 12 and 17u of the Kyoto Protocol)	Account ID	Role
A/S "Grizinkalns"	LV-HOLDING_ACCOUNT-5012164-0-34	Latvia's ETR operator (obligatory participation)
SIA "Bolderaja Ltd"	LV-HOLDING_ACCOUNT-5012166-0-24	Latvia's ETR operator (obligatory participation)
SIA "Talsu BIO-energija"	LV-HOLDING_ACCOUNT-5012167-0-19	Latvia's ETR operator (obligatory participation)
SIA "Port Milgravis"	LV-HOLDING_ACCOUNT-5012168-0-14	Latvia's ETR operator (obligatory participation)
SIA "Juglas jauda"	LV-HOLDING_ACCOUNT-5012169-0-9	Latvia's ETR operator (obligatory participation)
SIA "JELD-WEN Latvija"	LV-HOLDING_ACCOUNT-5012170-0-4	Latvia's ETR operator (obligatory participation)
A/S "Valmieras Energija" Rigas iela 25	LV-HOLDING_ACCOUNT-5012171-0-96	Latvia's ETR operator (obligatory participation)
A/S "Valmieras Energija" Dzelzcela iela 7	LV-HOLDING_ACCOUNT-5012172-0-91	Latvia's ETR operator (obligatory participation)
A/S "Latvijas Gaze"	LV-HOLDING_ACCOUNT-5012173-0-86	Latvia's ETR operator (obligatory participation)
SIA "Buvmateriali AN"	LV-HOLDING_ACCOUNT-5012174-0-81	Latvia's ETR operator (obligatory participation)
SIA "Fortum Jelgava"	LV-HOLDING_ACCOUNT-5012175-0-76	Latvia's ETR operator (obligatory participation)
SIA "Rigens"	LV-HOLDING_ACCOUNT-5012177-0-66	Latvia's ETR operator (obligatory participation)
SIA "Tennere"	LV-HOLDING_ACCOUNT-5012178-0-61	Latvia's ETR operator (obligatory participation)
SIA "Jaunpagasts Plus" Jaunpagasta spirta rupnica	LV-HOLDING_ACCOUNT-5012179-0-56	Latvia's ETR operator (obligatory participation)
A/S "Rezeknes Siltumtikli" Atbrivosanas aleja 155a	LV-HOLDING_ACCOUNT-5012180-0-51	Latvia's ETR operator (obligatory participation)
A/S "Rezeknes Siltumtikli" N.Rancana iela 5	LV-HOLDING_ACCOUNT-5012181-0-46	Latvia's ETR operator (obligatory participation)
A/S "Rezeknes Siltumtikli" Meza iela 1	LV-HOLDING_ACCOUNT-5012182-0-41	Latvia's ETR operator (obligatory participation)
SIA "Gamma - A"	LV-HOLDING_ACCOUNT-5012184-0-31	Latvia's ETR operator (obligatory participation)
SIA "CEMEX"	LV-HOLDING_ACCOUNT-5012185-0-26	Latvia's ETR operator (obligatory participation)
SIA Magnat Asset Management""	LV-HOLDING_ACCOUNT-5012183-0-36	Legal person
BERNIT GMBH	LV-HOLDING_ACCOUNT-5012186-0-21	Legal person
Aslam Wasim	LV-HOLDING_ACCOUNT-5012187-0-16	Legal person
Smartlynx Airlines	LV-HOLDING_ACCOUNT-5000042-0-19	Latvia's ETR aircraft operator (obligatory participation)
A/S AirBaltic Corporation""	LV-HOLDING_ACCOUNT-5000081-0-18	Latvia's ETR aircraft operator (obligatory participation)

ANNEX 7: TABLES 6.1 AND 6.2 OF THE IPCC GOOD PRACTICE GUIDANCE

Uncertainties without LULUCF

IPCC GHG Source and Sink Categories (LULUCF not included)		**1990 Estimate, Gg CO2-eq**	**2011 Estimate, Gg CO2-eq**	Activity data uncertainty	Emission factor uncertainty	Combined uncertainty	Combined uncertainty as % of total national emissions in year t	Type A sensitivity	Type B sensitivity	Uncertainty in trend in national emissions introduced by emission factor uncertainty	Uncertainty in trend in national emissions introduced by activity data uncertainty	Uncertainty introduced into the trend in total national emissions
1.A.1.a Public Electricity and Heat Production - Liquid Fuels	CO_2	3,050.347	46.677	2.00%	10.00%	10.20%	0.04%	-4.88%	0.18%	-0.49%	0.01%	0.49%
1.A.1.a Public Electricity and Heat Production - Solid Fuels	CO_2	338.628	39.722	2.00%	15.00%	15.13%	0.05%	-0.41%	0.15%	-0.06%	0.00%	0.06%
1.A.1.a Public Electricity and Heat Production - Gaseous Fuels	CO_2	2,644.313	1,914.395	2.00%	5.00%	5.39%	0.90%	2.88%	7.27%	0.14%	0.21%	0.25%
1.A.1.c Manufacture of Solid Fuels and Other Energy Industries - Liquid Fuels	CO_2	24.784	18.866	2.00%	10.00%	10.20%	0.02%	0.03%	0.07%	0.00%	0.00%	0.00%
1.A.1.c Manufacture of Solid Fuels and Other Energy Industries - Solid Fuels	CO_2	163.886		2.00%	15.00%	15.13%		-0.27%		-0.04%		0.04%
1.A.1.c Manufacture of Solid Fuels and Other Energy Industries - Gaseous Fuels	CO_2	44.672	52.078	2.00%	5.00%	5.39%	0.02%	0.12%	0.20%	0.01%	0.01%	0.01%
1.A.2.a Iron and Steel - Liquid Fuels	CO_2	135.757		2.00%	10.00%	10.20%		-0.23%		-0.02%		0.02%
1.A.2.a Iron and Steel - Solid Fuels	CO_2	4.587	9.298	2.00%	15.00%	15.13%	0.01%	0.03%	0.04%	0.00%	0.00%	0.00%
1.A.2.a Iron and Steel - Gaseous Fuels	CO_2	234.464	65.123	2.00%	5.00%	5.39%	0.03%	-0.14%	0.25%	-0.01%	0.01%	0.01%
1.A.2.b Non-Ferrous Metals - Gaseous Fuels	CO_2		9.310	2.00%	5.00%	5.39%	0.00%	0.04%	0.04%	0.00%	0.00%	0.00%
1.A.2.c Chemicals - Liquid Fuels	CO_2	276.669	9.132	2.00%	10.00%	10.20%	0.01%	-0.42%	0.03%	-0.04%	0.00%	0.04%
1.A.2.c Chemicals - Solid Fuels	CO_2			2.00%	15.00%	15.13%						
1.A.2.c Chemicals - Gaseous Fuels	CO_2	23.397	22.305	2.00%	5.00%	5.39%	0.01%	0.05%	0.08%	0.00%	0.00%	0.00%
1.A.2.d. Pulp, Paper and Print - Liquid Fuels	CO_2	15.547		2.00%	10.00%	10.20%		-0.03%		0.00%		0.00%
1.A.2.d. Pulp, Paper and Print - Solid Fuels	CO_2	2.417		2.00%	15.00%	15.13%		0.00%		0.00%		0.00%
1.A.2.d. Pulp, Paper and Print - Gaseous Fuels	CO_2	149.415	5.576	2.00%	5.00%	5.39%	0.00%	-0.23%	0.02%	-0.01%	0.00%	0.01%
1.A.2.e Food Processing, Beverages and Tobacco - Liquid Fuels	CO_2	798.124	33.093	2.00%	10.00%	10.20%	0.03%	-1.20%	0.13%	-0.12%	0.00%	0.12%
1.A.2.e Food Processing, Beverages and Tobacco - Solid Fuels	CO_2	91.116	2.417	2.00%	15.00%	15.13%	0.00%	-0.14%	0.01%	-0.02%	0.00%	0.02%
1.A.2.e Food Processing, Beverages and Tobacco - Gaseous Fuels	CO_2	174.195	103.409	2.00%	5.00%	5.39%	0.05%	0.10%	0.39%	0.01%	0.01%	0.01%

IPCC GHG Source and Sink Categories (LULUCF not included)		1990 Estimate, Gg CO2-eq	2011 Estimate, Gg CO2-eq	Activity data uncertainty	Emission factor uncertainty	Combined uncertainty	Combined uncertainty as % of total national emissions in year t	Type A sensitivity	Type B sensitivity	Uncertainty in trend in national emissions introduced by emission factor uncertainty	Uncertainty in trend in national emissions introduced by activity data uncertainty	Uncertainty introduced into the trend in total national emissions
1.A.2.f Other - Liquid Fuels	CO_2	944.946	137.979	2.00%	10.00%	10.20%	0.12%	-1.04%	0.52%	-0.10%	0.01%	0.11%
1.A.2.f Other - Solid Fuels	CO_2	38.236	200.640	2.00%	15.00%	15.13%	0.26%	0.70%	0.76%	0.10%	0.02%	0.11%
1.A.2.f Other - Gaseous Fuels	CO_2	835.236	211.151	2.00%	5.00%	5.39%	0.10%	-0.58%	0.80%	-0.03%	0.02%	0.04%
1.A.2.f Other - Other Fuels	CO_2		66.676	2.00%	5.00%	5.39%	0.03%	0.25%	0.25%	0.01%	0.01%	0.01%
1.A.3.c Civil Aviation - Aviation Gasoline	CO_2	0.011	0.491	2.00%	5.00%	5.39%	0.00%	0.00%	0.00%	0.00%	0.00%	0.00%
1.A.3.c Civil Aviation - Jet Kerosene	CO_2	0.055	0.150	2.00%	5.00%	5.39%	0.00%	0.00%	0.00%	0.00%	0.00%	0.00%
1.A.3.b Road Transportation - Gasoline	CO_2	1,689.330	763.653	2.00%	2.00%	2.83%	0.19%	0.10%	2.90%	0.00%	0.08%	0.08%
1.A.3.b Road Transportation - Diesel Oil	CO_2	616.136	1,993.449	2.00%	2.00%	2.83%	0.49%	6.55%	7.57%	0.13%	0.21%	0.25%
1.A.3.b Road Transportation - LPG	CO_2	36.957	73.934	2.00%	5.00%	5.39%	0.03%	0.22%	0.28%	0.01%	0.01%	0.01%
1.A.3.b Road Transportation - Lubricants	CO_2	3.428	4.611	10.00%	5.00%	11.18%	0.00%	0.01%	0.02%	0.00%	0.00%	0.00%
1.A.3.b Road Transportation - Gaseous Fuels	CO_2	19.580		2.00%	5.00%	5.39%		-0.03%		0.00%		0.00%
1.A.3.c Railways - Liquid Fuels	CO_2	531.380	232.656	2.00%	5.00%	5.39%	0.11%	0.00%	0.88%	0.00%	0.02%	0.02%
1.A.3.c Railways-Other Fuels (please specify)	CO_2											
1.A.3.d Naviagtion - Gasoline	CO_2	0.181	0.291	20.00%	5.00%	20.62%	0.00%	0.00%	0.00%	0.00%	0.00%	0.00%
1.A.3.d Naviagtion - Diesel Oil	CO_2	0.833	15.614	2.00%	5.00%	5.39%	0.01%	0.06%	0.06%	0.00%	0.00%	0.00%
1.A.4.a Commercial/Institutional - Liquid Fuels	CO_2	1,131.478	98.537	2.00%	10.00%	10.20%	0.09%	-1.50%	0.37%	-0.15%	0.01%	0.15%
1.A.4.a Commercial/Institutional - Solid Fuels	CO_2	1,331.987	106.459	2.00%	15.00%	15.13%	0.14%	-1.80%	0.40%	-0.27%	0.01%	0.27%
1.A.4.a Commercial/Institutional - Gaseous Fuels	CO_2	337.481	275.377	2.00%	5.00%	5.39%	0.13%	0.49%	1.05%	0.02%	0.03%	0.04%
1.A.4.b Residential - Liquid Fuels	CO_2	329.914	154.254	50.00%	10.00%	50.99%	0.68%	0.04%	0.59%	0.00%	0.41%	0.41%
1.A.4.b Residential - Solid Fuels	CO_2	585.452	102.243	50.00%	15.00%	52.20%	0.46%	-0.58%	0.39%	-0.09%	0.27%	0.29%
1.A.4.b Residential - Gaseous Fuels	CO_2	219.607	247.446	50.00%	5.00%	50.25%	1.08%	0.58%	0.94%	0.03%	0.66%	0.67%
1.A.4.c Agriculture/Forestry/Fisheries - Liquid Fuels	CO_2	694.469	349.456	2.00%	10.00%	10.20%	0.31%	0.18%	1.33%	0.02%	0.04%	0.04%
1.A.4.c Agriculture/Forestry/Fisheries - Solid Fuels	CO_2	94.804	2.417	2.00%	15.00%	15.13%	0.00%	-0.15%	0.01%	-0.02%	0.00%	0.02%
1.A.4.c Agriculture/Forestry/Fisheries - Gaseous Fuels	CO_2	778.520	43.017	2.00%	5.00%	5.39%	0.02%	-1.13%	0.16%	-0.06%	0.00%	0.06%
1.A.5.b Mobile - Liquid Fuels	CO_2		7.200	2.00%	50.00%	50.04%	0.03%	0.03%	0.03%	0.01%	0.00%	0.01%
1.B.2.b Natural Gas	CO_2	0.018	0.020	10.00%	30.00%	31.62%	0.00%	0.00%	0.00%	0.00%	0.00%	0.00%
2.A.1 Cement Production	CO_2	366.123	558.657	10.00%	5.00%	11.18%	0.54%	1.51%	2.12%	0.08%	0.30%	0.31%
2.A.2 Lime Production	CO_2	8.205	0.001	2.00%	50.00%	50.04%	0.00%	-0.01%	0.00%	-0.01%	0.00%	0.01%
2.A.3 Limestone and Dolomite	CO_2	141.005	4.940	2.00%	50.00%	50.04%	0.02%	-0.22%	0.02%	-0.11%	0.00%	0.11%

IPCC GHG Source and Sink Categories (LULUCF not included)		1990 Estimate, Gg CO2-eq	2011 Estimate, Gg CO2-eq	Activity data uncertainty	Emission factor uncertainty	Combined uncertainty	Combined uncertainty as % of total national emissions in year t	Type A sensitivity	Type B sensitivity	Uncertainty in trend in national emissions introduced by emission factor uncertainty	Uncertainty in trend in national emissions introduced by activity data uncertainty	Uncertainty introduced into the trend in total national emissions
Use												
2.A.4 Soda Ash Production and Use	CO_2			2.00%	50.00%	50.04%						
2.A.5 Asphalt Roofing	CO_2	0.000	0.002	20.00%	70.00%	72.80%	0.00%	0.00%	0.00%	0.00%	0.00%	0.00%
2.A.6 Road Paving with Asphalt	CO_2	1.463	62.534	20.00%	70.00%	72.80%	0.40%	0.24%	0.24%	0.16%	0.07%	0.18%
2.A.7 Other	CO_2	69.189	5.639	15.00%	60.00%	61.85%	0.03%	-0.09%	0.02%	-0.06%	0.00%	0.06%
2.C.1 Iron and Steel Production	CO_2	12.829	0.476	25.00%	5.00%	25.50%	0.00%	-0.02%	0.00%	0.00%	0.00%	0.00%
3.A Paint Aplication	CO_2	23.235	8.467	10.00%	75.00%	75.66%	0.06%	-0.01%	0.03%	0.00%	0.00%	0.01%
3.B Degreasing and Dry Cleaning	CO_2	7.075	0.016	10.00%	75.00%	75.66%	0.00%	-0.01%	0.00%	-0.01%	0.00%	0.01%
3.C Chemical Products, Manufacture and Processing	CO_2		1.687	2.00%	75.00%	75.03%	0.01%	0.01%	0.01%	0.00%	0.00%	0.00%
3.D Other	CO_2	20.394	26.182	10.00%	75.00%	75.66%	0.17%	0.07%	0.10%	0.05%	0.01%	0.05%
6.C Waste Incineration	CO_2		0.327	20.00%	50.00%	53.85%	0.00%	0.00%	0.00%	0.00%	0.00%	0.00%
2.F(a).1 Refrigeration and Air Conditioning Equipment	HFCs		74.275	75.00%	75.00%	106.07%	0.69%	0.28%	0.28%	0.21%	0.30%	0.37%
2.F(a).2 Foam Blowing	HFCs		0.646	75.00%	75.00%	106.07%	0.01%	0.00%	0.00%	0.00%	0.00%	0.00%
2.F(a).3 Fire Extinguisher	HFCs		0.393	75.00%	75.00%	106.07%	0.00%	0.00%	0.00%	0.00%	0.00%	0.00%
2.F(a).4 Aerosols/ Metered Dose Inhalers	HFCs		2.462	75.00%	75.00%	106.07%	0.02%	0.01%	0.01%	0.01%	0.01%	0.01%
2.F(a).8 Electrical Equipment	SF6		12.454	2.00%	10.00%	10.20%	0.01%	0.05%	0.05%	0.00%	0.00%	0.00%
2.F(a).9 Other	HFCs		5.198	75.00%	75.00%	106.07%	0.05%	0.02%	0.02%	0.01%	0.02%	0.03%
1.A.1.a Public Electricity and Heat Production - Liquid Fuels	CH_4	2.528	0.038	2.00%	50.00%	50.04%	0.00%	0.00%	0.00%	0.00%	0.00%	0.00%
1.A.1.a Public Electricity and Heat Production - Solid Fuels	CH_4	0.916	0.015	2.00%	50.00%	50.04%	0.00%	0.00%	0.00%	0.00%	0.00%	0.00%
1.A.1.a Public Electricity and Heat Production - Gaseous Fuels	CH_4	1.004	0.727	2.00%	50.00%	50.04%	0.00%	0.00%	0.00%	0.00%	0.00%	0.00%
1.A.1.a Public Electricity and Heat Production - Biomass Fuels	CH_4	0.275	2.897	20.00%	50.00%	53.85%	0.01%	0.01%	0.01%	0.01%	0.00%	0.01%
1.A.1.c Manufacture of Solid Fuels and Other Energy Industries - Liquid Fuels	CH_4	0.021	0.016	2.00%	50.00%	50.04%	0.00%	0.00%	0.00%	0.00%	0.00%	0.00%
1.A.1.c Manufacture of Solid Fuels and Other Energy Industries - Solid Fuels	CH_4	0.994		2.00%	50.00%	50.04%		0.00%		0.00%		0.00%
1.A.1.c Manufacture of Solid Fuels and Other Energy Industries - Gaseous Fuels	CH_4	0.017	0.020	2.00%	50.00%	50.04%	0.00%	0.00%	0.00%	0.00%	0.00%	0.00%
1.A.1.c Manufacture of Solid Fuels and Other Energy Industries - Biomass Fuels	CH_4		0.397	15.00%	50.00%	52.20%	0.00%	0.00%	0.00%	0.00%	0.00%	0.00%
1.A.2.a Iron and Steel - Liquid Fuels	CH_4	0.086		2.00%	50.00%	50.04%		0.00%		0.00%		0.00%
1.A.2.a Iron and Steel - Solid Fuels	CH_4	0.011	0.022	2.00%	50.00%	50.04%	0.00%	0.00%	0.00%	0.00%	0.00%	0.00%
1.A.2.a Iron and Steel - Gaseous Fuels	CH_4	0.445	0.124	2.00%	50.00%	50.04%	0.00%	0.00%	0.00%	0.00%	0.00%	0.00%

IPCC GHG Source and Sink Categories (LULUCF not included)		1990 Estimate, Gg CO2-eq	2011 Estimate, Gg CO2-eq	Activity data uncertainty	Emission factor uncertainty	Combined uncertainty	Combined uncertainty as % of total national emissions in year t	Type A sensitivity	Type B sensitivity	Uncertainty in trend in national emissions introduced by emission factor uncertainty	Uncertainty in trend in national emissions introduced by activity data uncertainty	Uncertainty introduced into the trend in total national emissions
1.A.2.b Non-Ferrous Metals - Gaseous Fuels	CH_4		0.018	2.00%	50.00%	50.04%	0.00%	0.00%	0.00%	0.00%	0.00%	0.00%
1.A.2.b Non-Ferrous Metals - Biomass Fuels	CH_4			15.00%	50.00%	52.20%						
1.A.2.c Chemicals - Liquid Fuels	CH_4	0.153	0.005	2.00%	50.00%	50.04%	0.00%	0.00%	0.00%	0.00%	0.00%	0.00%
1.A.2.c Chemicals - Solid Fuels	CH_4			2.00%	50.00%	50.04%						
1.A.2.c Chemicals - Gaseous Fuels	CH_4	0.044	0.042	2.00%	50.00%	50.04%	0.00%	0.00%	0.00%	0.00%	0.00%	0.00%
1.A.2.c Chemicals - Biomass Fuels	CH_4		0.107	15.00%	50.00%	52.20%	0.00%	0.00%	0.00%	0.00%	0.00%	0.00%
1.A.2.d. Pulp, Paper and Print - Liquid Fuels	CH_4	0.009		2.00%	50.00%	50.04%		0.00%		0.00%		0.00%
1.A.2.d. Pulp, Paper and Print - Solid Fuels	CH_4	0.006		2.00%	50.00%	50.04%		0.00%		0.00%		0.00%
1.A.2.d. Pulp, Paper and Print - Gaseous Fuels	CH_4	0.284	0.011	2.00%	50.00%	50.04%	0.00%	0.00%	0.00%	0.00%	0.00%	0.00%
1.A.2.d. Pulp, Paper and Print - Biomass Fuels	CH_4		0.067	15.00%	50.00%	52.20%	0.00%	0.00%	0.00%	0.00%	0.00%	0.00%
1.A.2.e Food Processing, Beverages and Tobacco - Liquid Fuels	CH_4	0.443	0.018	2.00%	50.00%	50.04%	0.00%	0.00%	0.00%	0.00%	0.00%	0.00%
1.A.2.e Food Processing, Beverages and Tobacco - Solid Fuels	CH_4	0.224	0.006	2.00%	50.00%	50.04%	0.00%	0.00%	0.00%	0.00%	0.00%	0.00%
1.A.2.e Food Processing, Beverages and Tobacco - Gaseous Fuels	CH_4	0.331	0.196	2.00%	50.00%	50.04%	0.00%	0.00%	0.00%	0.00%	0.00%	0.00%
1.A.2.e Food Processing, Beverages and Tobacco - Biomass Fuels	CH_4	0.144	0.227	15.00%	50.00%	52.20%	0.00%	0.00%	0.00%	0.00%	0.00%	0.00%
1.A.2.f Other - Liquid Fuels	CH_4	1.413	0.122	2.00%	50.00%	50.04%	0.00%	0.00%	0.00%	0.00%	0.00%	0.00%
1.A.2.f Other - Solid Fuels	CH_4	0.094	0.457	2.00%	50.00%	50.04%	0.00%	0.00%	0.00%	0.00%	0.00%	0.00%
1.A.2.f Other - Gaseous Fuels	CH_4	1.585	0.401	2.00%	50.00%	50.04%	0.00%	0.00%	0.00%	0.00%	0.00%	0.00%
1.A.2.f Other - Biomass Fuels	CH_4	0.245	6.648	15.00%	50.00%	52.20%	0.03%	0.02%	0.03%	0.01%	0.01%	0.01%
1.A.2.f Other - Other Fuels	CH_4		1.170	2.00%	50.00%	50.04%	0.01%	0.00%	0.00%	0.00%	0.00%	0.00%
1.A.3.c Civil Aviation - Aviation Gasoline	CH_4	0.000	0.000	2.00%	50.00%	50.04%	0.00%	0.00%	0.00%	0.00%	0.00%	0.00%
1.A.3.c Civil Aviation - Jet Kerosene	CH_4	0.000	0.000	2.00%	50.00%	50.04%	0.00%	0.00%	0.00%	0.00%	0.00%	0.00%
1.A.3.b Road Transportation - Gasoline	CH_4	14.410	2.339	2.00%	50.00%	50.04%	0.01%	-0.02%	0.01%	-0.01%	0.00%	0.01%
1.A.3.b Road Transportation - Diesel Oil	CH_4	0.931	1.344	2.00%	50.00%	50.04%	0.01%	0.00%	0.01%	0.00%	0.00%	0.00%
1.A.3.b Road Transportation - LPG	CH_4	0.105	0.360	2.00%	50.00%	50.04%	0.00%	0.00%	0.00%	0.00%	0.00%	0.00%
1.A.3.b Road Transportation - Lubricants	CH_4	0.014	0.012	10.00%	50.00%	50.99%	0.00%	0.00%	0.00%	0.00%	0.00%	0.00%

IPCC GHG Source and Sink Categories (LULUCF not included)		1990 Estimate, Gg CO2-eq	2011 Estimate, Gg CO2-eq	Activity data uncertainty	Emission factor uncertainty	Combined uncertainty	Combined uncertainty as % of total national emissions in year t	Type A sensitivity	Type B sensitivity	Uncertainty in trend in national emissions introduced by emission factor uncertainty	Uncertainty in trend in national emissions introduced by activity data uncertainty	Uncertainty introduced into the trend in total national emissions
1.A.3.b Road Transportation - Gaseous Fuels	CH_4	0.356		2.00%	50.00%	50.04%		0.00%		0.00%		0.00%
1.A.3.b Road Transportation - Biomass	CH_4		0.038	2.00%	50.00%	50.04%	0.00%	0.00%	0.00%	0.00%	0.00%	0.00%
1.A.3.c Railways - Liquid Fuels	CH_4	0.639	0.280	2.00%	50.00%	50.04%	0.00%	0.00%	0.00%	0.00%	0.00%	0.00%
1.A.3.d Naviagtion - Diesel Oil	CH_4	0.001	0.018	2.00%	50.00%	50.04%	0.00%	0.00%	0.00%	0.00%	0.00%	0.00%
1.A.3.d Naviagtion - Gasoline	CH_4	0.002	0.004	20.00%	50.00%	53.85%	0.00%	0.00%	0.00%	0.00%	0.00%	0.00%
1.A.3.c Railways (Biofuels for 1A3C)	CH_4			2.00%	50.00%	50.04%						
1.A.4.a Commercial/Institutional - Liquid Fuels	CH_4	3.203	0.356	2.00%	50.00%	50.04%	0.00%	0.00%	0.00%	0.00%	0.00%	0.00%
1.A.4.a Commercial/Institutional - Solid Fuels	CH_4	7.365	0.249	2.00%	50.00%	50.04%	0.00%	-0.01%	0.00%	-0.01%	0.00%	0.01%
1.A.4.a Commercial/Institutional - Gaseous Fuels	CH_4	0.641	0.523	2.00%	50.00%	50.04%	0.00%	0.00%	0.00%	0.00%	0.00%	0.00%
1.A.4.a Commercial/Institutional - Biomass	CH_4	32.873	25.464	20.00%	50.00%	53.85%	0.12%	0.04%	0.10%	0.02%	0.03%	0.03%
1.A.4.b Residential - Liquid Fuels	CH_4	1.031	1.079	50.00%	50.00%	70.71%	0.01%	0.00%	0.00%	0.00%	0.00%	0.00%
1.A.4.b Residential - Solid Fuels	CH_4	43.019	6.963	50.00%	50.00%	70.71%	0.04%	-0.04%	0.03%	-0.02%	0.02%	0.03%
1.A.4.b Residential - Gaseous Fuels	CH_4	0.417	0.470	50.00%	50.00%	70.71%	0.00%	0.00%	0.00%	0.00%	0.00%	0.00%
1.A.4.b Residential - Biomass	CH_4	126.063	164.707	50.00%	50.00%	70.71%	1.01%	0.42%	0.63%	0.21%	0.44%	0.49%
1.A.4.c Agriculture/Forestry/Fisheries - Liquid Fuels	CH_4	4.381	1.139	2.00%	50.00%	50.04%	0.00%	0.00%	0.00%	0.00%	0.00%	0.00%
1.A.4.c Agriculture/Forestry/Fisheries - Solid Fuels	CH_4	7.008	0.165	2.00%	50.00%	50.04%	0.00%	-0.01%	0.00%	-0.01%	0.00%	0.01%
1.A.4.c Agriculture/Forestry/Fisheries - Gaseous Fuels	CH_4	1.478	0.082	2.00%	50.00%	50.04%	0.00%	0.00%	0.00%	0.00%	0.00%	0.00%
1.A.4.c Agriculture/Forestry/Fisheries - Biomass Fuels	CH_4	7.686	2.276	2.00%	50.00%	50.04%	0.01%	0.00%	0.01%	0.00%	0.00%	0.00%
1.A.5.b Mobile - Liquid Fuels	CH_4		0.009	2.00%	50.00%	50.04%	0.00%	0.00%	0.00%	0.00%	0.00%	0.00%
1.B.2.b Natural Gas	CH_4	285.422	89.815	10.00%	30.00%	31.62%	0.25%	-0.13%	0.34%	-0.04%	0.05%	0.06%
1.B.2.d Natural Gas	CH_4	37.800	5.607	10.00%	30.00%	31.62%	0.02%	-0.04%	0.02%	-0.01%	0.00%	0.01%
2.C.1 Iron and Steel Production	CH_4	0.058	0.018	25.00%	10.00%	26.93%	0.00%	0.00%	0.00%	0.00%	0.00%	0.00%
4.A. Enteric Fermentation	CH_4	2,148.053	674.119	2.00%	20.00%	20.10%	1.18%	-1.00%	2.56%	-0.20%	0.07%	0.21%
4.B.Manure Management	CH_4	273.758	88.780	2.00%	30.00%	30.07%	0.23%	-0.12%	0.34%	-0.04%	0.01%	0.04%
6.A.1 Managed Waste Disposal on Land	CH_4		117.403	20.00%	52.00%	55.71%	0.57%	0.45%	0.45%	0.23%	0.13%	0.26%
6.B.1 Industrial Waste Water	CH_4	41.720	10.469	2.00%	30.00%	30.07%	0.03%	-0.03%	0.04%	-0.01%	0.00%	0.01%
6.B.2 Domestic and Commercial Waste Water	CH_4	97.860	48.980	10.00%	30.00%	31.62%	0.13%	0.02%	0.19%	0.01%	0.03%	0.03%
6.D Other	CH_4		1.991	20.00%	100.00%	101.98%	0.02%	0.01%	0.01%	0.01%	0.00%	0.01%

IPCC GHG Source and Sink Categories (LULUCF not included)		1990 Estimate, Gg CO2-eq	2011 Estimate, Gg CO2-eq	Activity data uncertainty	Emission factor uncertainty	Combined uncertainty	Combined uncertainty as % of total national emissions in year t	Type A sensitivity	Type B sensitivity	Uncertainty in trend in national emissions introduced by emission factor uncertainty	Uncertainty in trend in national emissions introduced by activity data uncertainty	Uncertainty introduced into the trend in total national emissions
1.A.1.a Public Electricity and Heat Production - Liquid Fuels	N_2O	7.464	0.114	2.00%	50.00%	50.04%	0.00%	-0.01%	0.00%	-0.01%	0.00%	0.01%
1.A.1.a Public Electricity and Heat Production - Solid Fuels	N_2O	2.709	0.195	2.00%	50.00%	50.04%	0.00%	0.00%	0.00%	0.00%	0.00%	0.00%
1.A.1.a Public Electricity and Heat Production - Gaseous Fuels	N_2O	1.482	1.074	2.00%	50.00%	50.04%	0.00%	0.00%	0.00%	0.00%	0.00%	0.00%
1.A.1.a Public Electricity and Heat Production - Biomass Fuels	N_2O	0.541	5.696	20.00%	50.00%	53.85%	0.03%	0.02%	0.02%	0.01%	0.01%	0.01%
1.A.1.c Manufacture of Solid Fuels and Other Energy Industries - Liquid Fuels	N_2O	0.063	0.047	2.00%	50.00%	50.04%	0.00%	0.00%	0.00%	0.00%	0.00%	0.00%
1.A.1.c Manufacture of Solid Fuels and Other Energy Industries - Solid Fuels	N_2O	1.957		2.00%	50.00%	50.04%		0.00%		0.00%		0.00%
1.A.1.c Manufacture of Solid Fuels and Other Energy Industries - Gaseous Fuels	N_2O	0.025	0.029	2.00%	50.00%	50.04%	0.00%	0.00%	0.00%	0.00%	0.00%	0.00%
1.A.1.c Manufacture of Solid Fuels and Other Energy Industries - Biomass Fuels	N_2O		0.781	15.00%	50.00%	52.20%	0.00%	0.00%	0.00%	0.00%	0.00%	0.00%
1.A.2.a Iron and Steel - Liquid Fuels	N_2O	0.383		2.00%	50.00%	50.04%		0.00%		0.00%		0.00%
1.A.2.a Iron and Steel - Solid Fuels	N_2O	0.023	0.046	2.00%	50.00%	50.04%	0.00%	0.00%	0.00%	0.00%	0.00%	0.00%
1.A.2.a Iron and Steel - Gaseous Fuels	N_2O	0.131	0.037	2.00%	50.00%	50.04%	0.00%	0.00%	0.00%	0.00%	0.00%	0.00%
1.A.2.b Non-Ferrous Metals - Gaseous Fuels	N_2O		0.005	2.00%	50.00%	50.04%	0.00%	0.00%	0.00%	0.00%	0.00%	0.00%
1.A.2.c Chemicals - Liquid Fuels	N_2O	0.677	0.024	2.00%	50.00%	50.04%	0.00%	0.00%	0.00%	0.00%	0.00%	0.00%
1.A.2.c Chemicals - Gaseous Fuels	N_2O	0.013	0.013	2.00%	50.00%	50.04%	0.00%	0.00%	0.00%	0.00%	0.00%	0.00%
1.A.2.c Chemicals - Biomass Fuels	N_2O		0.210	15.00%	50.00%	52.20%	0.00%	0.00%	0.00%	0.00%	0.00%	0.00%
1.A.2.d. Pulp, Paper and Print - Liquid Fuels	N_2O	0.038		2.00%	50.00%	50.04%		0.00%		0.00%		0.00%
1.A.2.d. Pulp, Paper and Print - Solid Fuels	N_2O	0.012		2.00%	50.00%	50.04%		0.00%		0.00%		0.00%
1.A.2.d. Pulp, Paper and Print - Gaseous Fuels	N_2O	0.084	0.003	2.00%	50.00%	50.04%	0.00%	0.00%	0.00%	0.00%	0.00%	0.00%
1.A.2.d. Pulp, Paper and Print - Biomass Fuels	N_2O		0.133	15.00%	50.00%	52.20%	0.00%	0.00%	0.00%	0.00%	0.00%	0.00%
1.A.2.e Food Processing, Beverages and Tobacco - Liquid Fuels	N_2O	1.962	0.081	2.00%	50.00%	50.04%	0.00%	0.00%	0.00%	0.00%	0.00%	0.00%
1.A.2.e Food Processing, Beverages and Tobacco - Solid Fuels	N_2O	0.464	0.011	2.00%	50.00%	50.04%	0.00%	0.00%	0.00%	0.00%	0.00%	0.00%

IPCC GHG Source and Sink Categories (LULUCF not included)		1990 Estimate, Gg CO2-eq	2011 Estimate, Gg CO2-eq	Activity data uncertainty	Emission factor uncertainty	Combined uncertainty	Combined uncertainty as % of total national emissions in year t	Type A sensitivity	Type B sensitivity	Uncertainty in trend in national emissions introduced by emission factor uncertainty	Uncertainty in trend in national emissions introduced by activity data uncertainty	Uncertainty introduced into the trend in total national emissions
1.A.2.e Food Processing, Beverages and Tobacco - Gaseous Fuels	N_2O	0.098	0.058	2.00%	50.00%	50.04%	0.00%	0.00%	0.00%	0.00%	0.00%	0.00%
1.A.2.e Food Processing, Beverages and Tobacco - Biomass Fuels	N_2O	0.283	0.448	15.00%	50.00%	52.20%	0.00%	0.00%	0.00%	0.00%	0.00%	0.00%
1.A.2.f Other - Liquid Fuels	N_2O	2.709	0.361	2.00%	50.00%	50.04%	0.00%	0.00%	0.00%	0.00%	0.00%	0.00%
1.A.2.f Other - Solid Fuels	N_2O	0.195	0.944	2.00%	50.00%	50.04%	0.00%	0.00%	0.00%	0.00%	0.00%	0.00%
1.A.2.f Other - Gaseous Fuels	N_2O	0.468	0.118	2.00%	50.00%	50.04%	0.00%	0.00%	0.00%	0.00%	0.00%	0.00%
1.A.2.f Other - Biomass Fuels	N_2O	0.482	13.083	15.00%	50.00%	52.20%	0.06%	0.05%	0.05%	0.02%	0.01%	0.03%
1.A.2.f Other - Other Fuels	N_2O		2.303	2.00%	50.00%	50.04%	0.01%	0.01%	0.01%	0.00%	0.00%	0.00%
1.A.3.c Civil Aviation - Aviation Gasoline	N_2O	0.000	0.004	2.00%	50.00%	50.04%	0.00%	0.00%	0.00%	0.00%	0.00%	0.00%
1.A.3.c Civil Aviation - Jet Kerosene	N_2O	0.000	0.002	2.00%	50.00%	50.04%	0.00%	0.00%	0.00%	0.00%	0.00%	0.00%
1.A.3.b Road Transportation - Gasoline	N_2O	13.601	5.311	2.00%	50.00%	50.04%	0.02%	0.00%	0.02%	0.00%	0.00%	0.00%
1.A.3.b Road Transportation - Diesel Oil	N_2O	5.819	14.350	2.00%	50.00%	50.04%	0.06%	0.04%	0.05%	0.02%	0.00%	0.02%
1.A.3.b Road Transportation - LPG	N_2O	0.170	1.379	2.00%	50.00%	50.04%	0.01%	0.00%	0.01%	0.00%	0.00%	0.00%
1.A.3.b Road Transportation - Lubricants	N_2O	0.024	0.046	10.00%	50.00%	50.99%	0.00%	0.00%	0.00%	0.00%	0.00%	0.00%
1.A.3.b Road Transportation - Gaseous Fuels	N_2O	0.011		2.00%	50.00%	50.04%		0.00%		0.00%		0.00%
1.A.3.b Road Transportation - Biomass	N_2O		0.720	2.00%	50.00%	50.04%	0.00%	0.00%	0.00%	0.00%	0.00%	0.00%
1.A.3.c Railways - Liquid Fuels	N_2O	64.964	28.443	2.00%	50.00%	50.04%	0.12%	0.00%	0.11%	0.00%	0.00%	0.00%
1.A.3.d Naviagtion - Diesel Oil	N_2O	0.105	1.962	2.00%	50.00%	50.04%	0.01%	0.01%	0.01%	0.00%	0.00%	0.00%
1.A.3.d Naviagtion - Gasoline	N_2O	0.000	0.000	20.00%	50.00%	53.85%	0.00%	0.00%	0.00%	0.00%	0.00%	0.00%
1.A.3.c Railways (Biofuels for 1A3C)	N_2O		0.039	2.00%	50.00%	50.04%	0.00%	0.00%	0.00%	0.00%	0.00%	0.00%
1.A.4.a Commercial/Institutional - Liquid Fuels	N_2O	2.823	0.288	2.00%	50.00%	50.04%	0.00%	0.00%	0.00%	0.00%	0.00%	0.00%
1.A.4.a Commercial/Institutional - Solid Fuels	N_2O	7.306	0.502	2.00%	50.00%	50.04%	0.00%	-0.01%	0.00%	-0.01%	0.00%	0.01%
1.A.4.a Commercial/Institutional - Gaseous Fuels	N_2O	0.189	0.154	2.00%	50.00%	50.04%	0.00%	0.00%	0.00%	0.00%	0.00%	0.00%
1.A.4.a Commercial/Institutional - Biomass	N_2O	6.470	5.031	20.00%	50.00%	53.85%	0.02%	0.01%	0.02%	0.00%	0.01%	0.01%
1.A.4.b Residential - Liquid Fuels	N_2O	0.913	0.531	50.00%	50.00%	70.71%	0.00%	0.00%	0.00%	0.00%	0.00%	0.00%
1.A.4.b Residential - Solid Fuels	N_2O	3.306	0.504	50.00%	50.00%	70.71%	0.00%	0.00%	0.00%	0.00%	0.00%	0.00%
1.A.4.b Residential - Gaseous Fuels	N_2O	0.123	0.139	50.00%	50.00%	70.71%	0.00%	0.00%	0.00%	0.00%	0.00%	0.00%
1.A.4.b Residential - Biomass	N_2O	24.812	34.204	50.00%	50.00%	70.71%	0.21%	0.09%	0.13%	0.04%	0.09%	0.10%
1.A.4.c Agriculture/Forestry/Fisheries -	N_2O	2.468	0.923	2.00%	50.00%	50.04%	0.00%	0.00%	0.00%	0.00%	0.00%	0.00%

IPCC GHG Source and Sink Categories (LULUCF not included)		**1990 Estimate, Gg CO2-eq**	**2011 Estimate, Gg CO2-eq**	Activity data uncertainty	Emission factor uncertainty	Combined uncertainty	Combined uncertainty as % of total national emissions in year t	Type A sensitivity	Type B sensitivity	Uncertainty in trend in national emissions introduced by emission factor uncertainty	Uncertainty in trend in national emissions introduced by activity data uncertainty	Uncertainty introduced into the trend in total national emissions
Liquid Fuels												
1.A.4.c Agriculture/Forestry/Fisheries - Solid Fuels	N_2O	0.508	0.011	2.00%	50.00%	50.04%	0.00%	0.00%	0.00%	0.00%	0.00%	0.00%
1.A.4.c Agriculture/Forestry/Fisheries - Gaseous Fuels	N_2O	0.436	0.024	2.00%	50.00%	50.04%	0.00%	0.00%	0.00%	0.00%	0.00%	0.00%
1.A.4.c Agriculture/Forestry/Fisheries - Biomass Fuels	N_2O	1.513	0.451	2.00%	50.00%	50.04%	0.00%	0.00%	0.00%	0.00%	0.00%	0.00%
1.A.5.b Mobile - Liquid Fuels	N_2O		0.026	2.00%	50.00%	50.04%	0.00%	0.00%	0.00%	0.00%	0.00%	0.00%
3.D Other	N_2O		4.960	2.00%	2.00%	2.83%	0.00%	0.02%	0.02%	0.00%	0.00%	0.00%
4.B.Manure Management	N_2O	569.677	122.135	40.00%	30.00%	50.00%	0.53%	-0.48%	0.46%	-0.14%	0.26%	0.30%
4.D.1. Direct Soil Emissions	N_2O	1,618.317	954.865	40.00%	25.00%	47.17%	3.92%	0.94%	3.63%	0.24%	2.05%	2.07%
4.D.2 Pasture, Range and Paddock Manure	N_2O	358.351	86.977	40.00%	25.00%	47.17%	0.36%	-0.26%	0.33%	-0.07%	0.19%	0.20%
4.D.3.Indirect Emissions	N_2O	1,033.873	388.649	30.00%	40.00%	50.00%	1.69%	-0.24%	1.48%	-0.10%	0.63%	0.63%
6.B.1 Industrial Waste Water	N_2O	2.436	0.224	10.00%	30.00%	31.62%	0.00%	0.00%	0.00%	0.00%	0.00%	0.00%
6.B.2 Domestic and Commercial Waste Water	N_2O	63.528	49.400	10.00%	30.00%	31.62%	0.14%	0.08%	0.19%	0.02%	0.03%	0.04%
6.A.2. Unmanaged Waste Disposal Sites	CH4	329.978	321.613	20.00%	52.00%	55.71%	1.56%	0.67%	1.22%	0.35%	0.35%	0.49%
6.C Waste Incineration	N_2O		0.012	20.00%	90.00%	92.20%	0.00%	0.00%	0.00%	0.00%	0.00%	0.00%
6.D Other	N_2O		2.204	20.00%	90.00%	92.20%	0.02%	0.01%	0.01%	0.01%	0.00%	0.01%
TOTAL	**CO_2 eq**	**26,323.42**	**11,494.18**	**19.91**	**76.75**	**83.61**	**0.20**	**0.00%**	**43.67%**	**-0.10%**	**7.25%**	**10.06%**
CONTROL				Percentage uncertainty in total inventory			**44.73%**				Trend uncertainty	**31.72%**
		Input Data	Input Data	Input Data	Input Data	$\sqrt{E^2+F^2}$	$\frac{G \bullet D}{\sum D}$	Note B	$\frac{D}{\sum C}$	$I \bullet F$ Note C	$J \bullet E \bullet \sqrt{2}$ Note D	$\sqrt{K^2+L^2}$

Uncertainties with LULUCF

IPCC GHG Source and Sink Categories (LULUCF is included)		1990 Estimate, Gg CO2-eq	2011 Estimate, Gg CO2-eq	Activity data uncertainty	Emission factor uncertainty	Combined uncertainty	Combined uncertainty as % of total national emissions in year t	Type A sensitivity	Type B sensitivity	Uncertainty in trend in national emissions introduced by emission factor uncertainty	Uncertainty in trend in national emissions introduced by activity data uncertainty	Uncertainty introduced into the trend in total national emissions
1.A.1.a Public Electricity and Heat Production - Liquid Fuels	CO_2	3,050.347	46.677	2.00%	10.00%	10.20%	-0.08%	107.79%	1.16%	10.78%	0.03%	10.78%
1.A.1.a Public Electricity and Heat Production - Solid Fuels	CO_2	338.628	39.722	2.00%	15.00%	15.13%	-0.11%	12.91%	0.99%	1.94%	0.03%	1.94%
1.A.1.a Public Electricity and Heat Production - Gaseous Fuels	CO_2	2,644.313	1,914.395	2.00%	5.00%	5.39%	-1.81%	139.88%	47.65%	6.99%	1.35%	7.12%
1.A.1.c Manufacture of Solid Fuels and Other Energy Industries - Liquid Fuels	CO_2	24.784	18.866	2.00%	10.00%	10.20%	-0.03%	1.34%	0.47%	0.13%	0.01%	0.13%
1.A.1.c Manufacture of Solid Fuels and Other Energy Industries - Solid Fuels	CO_2	163.886		2.00%	15.00%	15.13%		5.77%		0.87%		0.87%
1.A.1.c Manufacture of Solid Fuels and Other Energy Industries - Gaseous Fuels	CO_2	44.672	52.078	2.00%	5.00%	5.39%	-0.05%	2.87%	1.30%	0.14%	0.04%	0.15%
1.A.2.a Iron and Steel - Liquid Fuels	CO_2	135.757		2.00%	10.00%	10.20%		4.78%		0.48%		0.48%
1.A.2.a Iron and Steel - Solid Fuels	CO_2	4.587	9.298	2.00%	15.00%	15.13%	-0.02%	0.39%	0.23%	0.06%	0.01%	0.06%
1.A.2.a Iron and Steel - Gaseous Fuels	CO_2	234.464	65.123	2.00%	5.00%	5.39%	-0.06%	9.87%	1.62%	0.49%	0.05%	0.50%
1.A.2.b Non-Ferrous Metals - Gaseous Fuels	CO_2		9.310	2.00%	5.00%	5.39%	-0.01%	0.23%	0.23%	0.01%	0.01%	0.01%
1.A.2.c Chemicals - Liquid Fuels	CO_2	276.669	9.132	2.00%	10.00%	10.20%	-0.02%	9.97%	0.23%	1.00%	0.01%	1.00%
1.A.2.c Chemicals - Gaseous Fuels	CO_2	23.397	22.305	2.00%	5.00%	5.39%	-0.02%	1.38%	0.56%	0.07%	0.02%	0.07%
1.A.2.d. Pulp, Paper and Print - Liquid Fuels	CO_2	15.547		2.00%	10.00%	10.20%		0.55%		0.05%		0.05%
1.A.2.d. Pulp, Paper and Print - Solid Fuels	CO_2	2.417		2.00%	15.00%	15.13%		0.09%		0.01%		0.01%
1.A.2.d. Pulp, Paper and Print - Gaseous Fuels	CO_2	149.415	5.576	2.00%	5.00%	5.39%	-0.01%	5.40%	0.14%	0.27%	0.00%	0.27%
1.A.2.e Food Processing, Beverages and Tobacco - Liquid Fuels	CO_2	798.124	33.093	2.00%	10.00%	10.20%	-0.06%	28.88%	0.82%	2.89%	0.02%	2.89%
1.A.2.e Food Processing, Beverages and Tobacco - Solid Fuels	CO_2	91.116	2.417	2.00%	15.00%	15.13%	-0.01%	3.27%	0.06%	0.49%	0.00%	0.49%
1.A.2.e Food Processing, Beverages and Tobacco - Gaseous Fuels	CO_2	174.195	103.409	2.00%	5.00%	5.39%	-0.10%	8.71%	2.57%	0.44%	0.07%	0.44%
1.A.2.f Other - Liquid Fuels	CO_2	944.946	137.979	2.00%	10.00%	10.20%	-0.25%	36.63%	3.43%	3.66%	0.10%	3.66%
1.A.2.f Other - Solid Fuels	CO_2	38.236	200.640	2.00%	15.00%	15.13%	-0.53%	6.34%	4.99%	0.95%	0.14%	0.96%
1.A.2.f Other - Gaseous Fuels	CO_2	835.236	211.151	2.00%	5.00%	5.39%	-0.20%	34.61%	5.26%	1.73%	0.15%	1.74%

IPCC GHG Source and Sink Categories (LULUCF is included)		1990 Estimate, Gg CO2-eq	2011 Estimate, Gg CO2-eq	Activity data uncertainty	Emission factor uncertainty	Combined uncertainty	Combined uncertainty as % of total national emissions in year t	Type A sensitivity	Type B sensitivity	Uncertainty in trend in national emissions introduced by emission factor uncertainty	Uncertainty in trend in national emissions introduced by activity data uncertainty	Uncertainty introduced into the trend in total national emissions
1.A.2.f Other - Other Fuels	CO_2		66.676	2.00%	5.00%	5.39%	-0.06%	1.66%	1.66%	0.08%	0.05%	0.10%
1.A.3.c Civil Aviation - Aviation Gasoline	CO_2	0.011	0.491	2.00%	5.00%	5.39%	0.00%	0.01%	0.01%	0.00%	0.00%	0.00%
1.A.3.c Civil Aviation - Jet Kerosene	CO_2	0.055	0.150	2.00%	5.00%	5.39%	0.00%	0.01%	0.00%	0.00%	0.00%	0.00%
1.A.3.b Road Transportation - Gasoline	CO_2	1,689.330	763.653	2.00%	2.00%	2.83%	-0.38%	78.19%	19.01%	1.56%	0.54%	1.65%
1.A.3.b Road Transportation - Diesel Oil	CO_2	616.136	1,993.449	2.00%	2.00%	2.83%	-0.99%	71.21%	49.62%	1.42%	1.40%	2.00%
1.A.3.b Road Transportation - LPG	CO_2	36.957	73.934	2.00%	5.00%	5.39%	-0.07%	3.14%	1.84%	0.16%	0.05%	0.17%
1.A.3.b Road Transportation - Lubricants	CO_2	3.428	4.611	10.00%	5.00%	11.18%	-0.01%	0.24%	0.11%	0.01%	0.02%	0.02%
1.A.3.b Road Transportation - Gaseous Fuels	CO_2	19.580		2.00%	5.00%	5.39%		0.69%		0.03%		0.03%
1.A.3.c Railways - Liquid Fuels	CO_2	531.380	232.656	2.00%	5.00%	5.39%	-0.22%	24.48%	5.79%	1.22%	0.16%	1.23%
1.A.3.d Naviagtion - Gasoline	CO_2	0.181	0.291	20.00%	5.00%	20.62%	0.00%	0.01%	0.01%	0.00%	0.00%	0.00%
1.A.3.d Naviagtion - Diesel Oil	CO_2	0.833	15.614	2.00%	5.00%	5.39%	-0.01%	0.42%	0.39%	0.02%	0.01%	0.02%
1.A.4.a Commercial/Institutional - Liquid Fuels	CO_2	1,131.478	98.537	2.00%	10.00%	10.20%	-0.18%	42.19%	2.45%	4.22%	0.07%	4.22%
1.A.4.a Commercial/Institutional - Solid Fuels	CO_2	1,331.987	106.459	2.00%	15.00%	15.13%	-0.28%	49.41%	2.65%	7.41%	0.07%	7.41%
1.A.4.a Commercial/Institutional - Gaseous Fuels	CO_2	337.481	275.377	2.00%	5.00%	5.39%	-0.26%	18.73%	6.85%	0.94%	0.19%	0.96%
1.A.4.b Residential - Liquid Fuels	CO_2	329.914	154.254	50.00%	10.00%	50.99%	-1.38%	15.45%	3.84%	1.54%	2.72%	3.12%
1.A.4.b Residential - Solid Fuels	CO_2	585.452	102.243	50.00%	15.00%	52.20%	-0.94%	23.13%	2.55%	3.47%	1.80%	3.91%
1.A.4.b Residential - Gaseous Fuels	CO_2	219.607	247.446	50.00%	5.00%	50.25%	-2.19%	13.89%	6.16%	0.69%	4.36%	4.41%
1.A.4.c Agriculture/Forestry/Fisheries - Liquid Fuels	CO_2	694.469	349.456	2.00%	10.00%	10.20%	-0.63%	33.10%	8.70%	3.31%	0.25%	3.32%
1.A.4.c Agriculture/Forestry/Fisheries - Solid Fuels	CO_2	94.804	2.417	2.00%	15.00%	15.13%	-0.01%	3.40%	0.06%	0.51%	0.00%	0.51%
1.A.4.c Agriculture/Forestry/Fisheries - Gaseous Fuels	CO_2	778.520	43.017	2.00%	5.00%	5.39%	-0.04%	28.44%	1.07%	1.42%	0.03%	1.42%
1.A.5.b Mobile - Liquid Fuels	CO_2		7.200	2.00%	50.00%	50.04%	-0.06%	0.18%	0.18%	0.09%	0.01%	0.09%
1.B.2.b Natural Gas	CO_2	0.018	0.020	10.00%	30.00%	31.62%	0.00%	0.00%	0.00%	0.00%	0.00%	0.00%
2.A.1 Cement Production	CO_2	366.123	558.657	10.00%	5.00%	11.18%	-1.10%	26.78%	13.91%	1.34%	1.97%	2.38%
2.A.2 Lime Production	CO_2	8.205	0.001	2.00%	50.00%	50.04%	0.00%	0.29%	0.00%	0.14%	0.00%	0.14%
2.A.3 Limestone and Dolomite Use	CO_2	141.005	4.940	2.00%	50.00%	50.04%	-0.04%	5.09%	0.12%	2.54%	0.00%	2.54%
2.A.5 Asphalt Roofing	CO_2	0.000	0.002	20.00%	70.00%	72.80%	0.00%	0.00%	0.00%	0.00%	0.00%	0.00%
2.A.6 Road Paving with Asphalt	CO_2	1.463	62.534	20.00%	70.00%	72.80%	-0.80%	1.61%	1.56%	1.13%	0.44%	1.21%

IPCC GHG Source and Sink Categories (LULUCF is included)		1990 Estimate, Gg CO2-eq	2011 Estimate, Gg CO2-eq	Activity data uncertainty	Emission factor uncertainty	Combined uncertainty	Combined uncertainty as % of total national emissions in year t	Type A sensitivity	Type B sensitivity	Uncertainty in trend in national emissions introduced by emission factor uncertainty	Uncertainty in trend in national emissions introduced by activity data uncertainty	Uncertainty introduced into the trend in total national emissions
2.A.7 Other	CO_2	69.189	5.639	15.00%	60.00%	61.85%	-0.06%	2.58%	0.14%	1.55%	0.03%	1.55%
2.C.1 Iron and Steel Production	CO_2	12.829	0.476	25.00%	5.00%	25.50%	0.00%	0.46%	0.01%	0.02%	0.00%	0.02%
3.A Paint Aplication	CO_2	23.235	8.467	10.00%	75.00%	75.66%	-0.11%	1.03%	0.21%	0.77%	0.03%	0.77%
3.B Degreasing and Dry Cleaning	CO_2	7.075	0.016	10.00%	75.00%	75.66%	0.00%	0.25%	0.00%	0.19%	0.00%	0.19%
3.C Chemical Products, Manufacture and Processing	CO_2		1.687	2.00%	75.00%	75.03%	-0.02%	0.04%	0.04%	0.03%	0.00%	0.03%
3.D Other	CO_2	20.394	26.182	10.00%	75.00%	75.66%	-0.35%	1.37%	0.65%	1.03%	0.09%	1.03%
5.A.1 Forest Land remaining Forest Land	CO_2	-23,057.878	-15,365.566	10.08%	30.00%	31.65%	85.54%	-1267.43%	-382.48%	-380.23%	-54.51%	384.12%
5.A.2 Land converted to Forest Land	CO_2	-11.116	-884.055	16.45%	30.00%	34.21%	5.32%	-22.40%	-22.01%	-6.72%	-5.12%	8.45%
5.B.1 Cropland remaining Cropland	CO_2	337.590	225.521	11.00%	90.00%	90.67%	-3.60%	17.49%	5.61%	15.74%	0.87%	15.77%
5.B.2 Land converted to Cropland	CO_2	265.382	143.106	35.00%	14.60%	37.92%	-0.95%	12.90%	3.56%	1.88%	1.76%	2.58%
5.C.1 Grassland remaining Grassland	CO_2	40.150	62.620	50.00%	90.00%	102.96%	-1.13%	2.97%	1.56%	2.68%	1.10%	2.89%
5.D.1 Wetlands remaining Wetlands	CO_2	19.800	19.800	90.00%	95.00%	130.86%	-0.46%	1.19%	0.49%	1.13%	0.63%	1.29%
5.E.2 Land converted to Settlements	CO_2	104.593	883.031	19.00%	14.60%	23.96%	-3.72%	25.66%	21.98%	3.75%	5.91%	6.99%
5.G. Other (Harvested Wood Products)	CO_2	-173.000	-2,434.000	10.00%	30.00%	31.62%	13.54%	-66.71%	-60.59%	-20.01%	-8.57%	21.77%
6.C Waste Incineration	CO_2		0.327	20.00%	50.00%	53.85%	0.00%	0.01%	0.01%	0.00%	0.00%	0.00%
2.F(a).1 Refrigeration and Air Conditioning Equipment	HFCs		74.275	75.00%	75.00%	106.07%	-1.39%	1.85%	1.85%	1.39%	1.96%	2.40%
2.F(a).2 Foam Blowing	HFCs		0.646	75.00%	75.00%	106.07%	-0.01%	0.02%	0.02%	0.01%	0.02%	0.02%
2.F(a).3 Fire Extinguisher	HFCs		0.393	75.00%	75.00%	106.07%	-0.01%	0.01%	0.01%	0.01%	0.01%	0.01%
2.F(a).4 Aerosols/ Metered Dose Inhalers	HFCs		2.462	75.00%	75.00%	106.07%	-0.05%	0.06%	0.06%	0.05%	0.07%	0.08%
2.F(a).8 Electrical Equipment	SF6		12.454	2.00%	10.00%	10.20%	-0.02%	0.31%	0.31%	0.03%	0.01%	0.03%
2.F(a).9 Other	HFCs		5.198	75.00%	75.00%	106.07%	-0.10%	0.13%	0.13%	0.10%	0.14%	0.17%
1.A.1.a Public Electricity and Heat Production - Liquid Fuels	CH_4	2.528	0.038	2.00%	50.00%	50.04%	0.00%	0.09%	0.00%	0.05%	0.00%	0.05%
1.A.1.a Public Electricity and Heat Production - Solid Fuels	CH_4	0.916	0.015	2.00%	50.00%	50.04%	0.00%	0.03%	0.00%	0.02%	0.00%	0.02%
1.A.1.a Public Electricity and Heat Production - Gaseous Fuels	CH_4	1.004	0.727	2.00%	50.00%	50.04%	-0.01%	0.05%	0.02%	0.03%	0.00%	0.03%
1.A.1.a Public Electricity and Heat Production - Biomass Fuels	CH_4	0.275	2.897	20.00%	50.00%	53.85%	-0.03%	0.08%	0.07%	0.04%	0.02%	0.05%
1.A.1.c Manufacture of Solid Fuels and Other Energy Industries - Liquid Fuels	CH_4	0.021	0.016	2.00%	50.00%	50.04%	0.00%	0.00%	0.00%	0.00%	0.00%	0.00%
1.A.1.c Manufacture of Solid Fuels and Other Energy Industries - Solid Fuels	CH_4	0.994		2.00%	50.00%	50.04%		0.04%		0.02%		0.02%

IPCC GHG Source and Sink Categories (LULUCF is included)		1990 Estimate, Gg CO2-eq	2011 Estimate, Gg CO2-eq	Activity data uncertainty	Emission factor uncertainty	Combined uncertainty	Combined uncertainty as % of total national emissions in year t	Type A sensitivity	Type B sensitivity	Uncertainty in trend in national emissions introduced by emission factor uncertainty	Uncertainty in trend in national emissions introduced by activity data uncertainty	Uncertainty introduced into the trend in total national emissions
1.A.1.c Manufacture of Solid Fuels and Other Energy Industries - Gaseous Fuels	CH_4	0.017	0.020	2.00%	50.00%	50.04%	0.00%	0.00%	0.00%	0.00%	0.00%	0.00%
1.A.1.c Manufacture of Solid Fuels and Other Energy Industries - Biomass Fuels	CH_4		0.397	15.00%	50.00%	52.20%	0.00%	0.01%	0.01%	0.00%	0.00%	0.01%
1.A.2.b Non-Ferrous Metals - Gaseous Fuels	CH_4		0.018	2.00%	50.00%	50.04%	0.00%	0.00%	0.00%	0.00%	0.00%	0.00%
1.A.2.a Iron and Steel - Liquid Fuels	CH_4	0.086		2.00%	50.00%	50.04%		0.00%		0.00%		0.00%
1.A.2.a Iron and Steel - Solid Fuels	CH_4	0.011	0.022	2.00%	50.00%	50.04%	0.00%	0.00%	0.00%	0.00%	0.00%	0.00%
1.A.2.a Iron and Steel - Gaseous Fuels	CH_4	0.445	0.124	2.00%	50.00%	50.04%	0.00%	0.02%	0.00%	0.01%	0.00%	0.01%
1.A.2.c Chemicals - Liquid Fuels	CH_4	0.153	0.005	2.00%	50.00%	50.04%	0.00%	0.01%	0.00%	0.00%	0.00%	0.00%
1.A.2.c Chemicals - Gaseous Fuels	CH_4	0.044	0.042	2.00%	50.00%	50.04%	0.00%	0.00%	0.00%	0.00%	0.00%	0.00%
1.A.2.c Chemicals - Biomass Fuels	CH_4		0.107	15.00%	50.00%	52.20%	0.00%	0.00%	0.00%	0.00%	0.00%	0.00%
1.A.2.d. Pulp, Paper and Print - Liquid Fuels	CH_4	0.009		2.00%	50.00%	50.04%		0.00%		0.00%		0.00%
1.A.2.d. Pulp, Paper and Print - Solid Fuels	CH_4	0.006		2.00%	50.00%	50.04%		0.00%		0.00%		0.00%
1.A.2.d. Pulp, Paper and Print - Gaseous Fuels	CH_4	0.284	0.011	2.00%	50.00%	50.04%	0.00%	0.01%	0.00%	0.01%	0.00%	0.01%
1.A.2.d. Pulp, Paper and Print - Biomass Fuels	CH_4		0.067	15.00%	50.00%	52.20%	0.00%	0.00%	0.00%	0.00%	0.00%	0.00%
1.A.2.e Food Processing, Beverages and Tobacco - Liquid Fuels	CH_4	0.443	0.018	2.00%	50.00%	50.04%	0.00%	0.02%	0.00%	0.01%	0.00%	0.01%
1.A.2.e Food Processing, Beverages and Tobacco - Solid Fuels	CH_4	0.224	0.006	2.00%	50.00%	50.04%	0.00%	0.01%	0.00%	0.00%	0.00%	0.00%
1.A.2.e Food Processing, Beverages and Tobacco - Gaseous Fuels	CH_4	0.331	0.196	2.00%	50.00%	50.04%	0.00%	0.02%	0.00%	0.01%	0.00%	0.01%
1.A.2.e Food Processing, Beverages and Tobacco - Biomass Fuels	CH_4	0.144	0.227	15.00%	50.00%	52.20%	0.00%	0.01%	0.01%	0.01%	0.00%	0.01%
1.A.2.f Other - Liquid Fuels	CH_4	1.413	0.122	2.00%	50.00%	50.04%	0.00%	0.05%	0.00%	0.03%	0.00%	0.03%
1.A.2.f Other - Solid Fuels	CH_4	0.094	0.457	2.00%	50.00%	50.04%	0.00%	0.01%	0.01%	0.01%	0.00%	0.01%
1.A.2.f Other - Gaseous Fuels	CH_4	1.585	0.401	2.00%	50.00%	50.04%	0.00%	0.07%	0.01%	0.03%	0.00%	0.03%
1.A.2.f Other - Biomass Fuels	CH_4	0.245	6.648	15.00%	50.00%	52.20%	-0.06%	0.17%	0.17%	0.09%	0.04%	0.09%
1.A.2.f Other - Other Fuels	CH_4		1.170	2.00%	50.00%	50.04%	-0.01%	0.03%	0.03%	0.01%	0.00%	0.01%
1.A.3.c Civil Aviation - Aviation Gasoline	CH_4	0.000	0.000	2.00%	50.00%	50.04%	0.00%	0.00%	0.00%	0.00%	0.00%	0.00%
1.A.3.c Civil Aviation - Jet	CH_4	0.000	0.000	2.00%	50.00%	50.04%	0.00%	0.00%	0.00%	0.00%	0.00%	0.00%

IPCC GHG Source and Sink Categories (LULUCF is included)		1990 Estimate, Gg CO2-eq	2011 Estimate, Gg CO2-eq	Activity data uncertainty	Emission factor uncertainty	Combined uncertainty	Combined uncertainty as % of total national emissions in year t	Type A sensitivity	Type B sensitivity	Uncertainty in trend in national emissions introduced by emission factor uncertainty	Uncertainty in trend in national emissions introduced by activity data uncertainty	Uncertainty introduced into the trend in total national emissions
Kerosene												
1.A.3.b Road Transportation - Gasoline	CH_4	14.410	2.339	2.00%	50.00%	50.04%	-0.02%	0.57%	0.06%	0.28%	0.00%	0.28%
1.A.3.b Road Transportation - Diesel Oil	CH_4	0.931	1.344	2.00%	50.00%	50.04%	-0.01%	0.07%	0.03%	0.03%	0.00%	0.03%
1.A.3.b Road Transportation - LPG	CH_4	0.105	0.360	2.00%	50.00%	50.04%	0.00%	0.01%	0.01%	0.01%	0.00%	0.01%
1.A.3.b Road Transportation - Lubricants	CH_4	0.014	0.012	10.00%	50.00%	50.99%	0.00%	0.00%	0.00%	0.00%	0.00%	0.00%
1.A.3.b Road Transportation - Gaseous Fuels	CH_4	0.356		2.00%	50.00%	50.04%		0.01%		0.01%		0.01%
1.A.3.b Road Transportation - Biomass	CH_4		0.038	2.00%	50.00%	50.04%	0.00%	0.00%	0.00%	0.00%	0.00%	0.00%
1.A.3.c Railways - Liquid Fuels	CH_4	0.639	0.280	2.00%	50.00%	50.04%	0.00%	0.03%	0.01%	0.01%	0.00%	0.01%
1.A.3.d Naviagtion - Gasoline	CH_4	0.002	0.004	20.00%	50.00%	53.85%	0.00%	0.00%	0.00%	0.00%	0.00%	0.00%
1.A.3.d Naviagtion - Diesel Oil	CH_4	0.001	0.018	2.00%	50.00%	50.04%	0.00%	0.00%	0.00%	0.00%	0.00%	0.00%
1.A.3.c. Railway (Biofuels for 1A3C)	CH_4		0.002	2.00%	50.00%	50.04%	0.00%	0.00%	0.00%	0.00%	0.00%	0.00%
1.A.4.a Commercial/Institutional - Liquid Fuels	CH_4	3.203	0.356	2.00%	50.00%	50.04%	0.00%	0.12%	0.01%	0.06%	0.00%	0.06%
1.A.4.a Commercial/Institutional - Solid Fuels	CH_4	7.365	0.249	2.00%	50.00%	50.04%	0.00%	0.27%	0.01%	0.13%	0.00%	0.13%
1.A.4.a Commercial/Institutional - Gaseous Fuels	CH_4	0.641	0.523	2.00%	50.00%	50.04%	0.00%	0.04%	0.01%	0.02%	0.00%	0.02%
1.A.4.a Commercial/Institutional - Biomass	CH_4	32.873	25.464	20.00%	50.00%	53.85%	-0.24%	1.79%	0.63%	0.90%	0.18%	0.91%
1.A.4.b Residential - Liquid Fuels	CH_4	1.031	1.079	50.00%	50.00%	70.71%	-0.01%	0.06%	0.03%	0.03%	0.02%	0.04%
1.A.4.b Residential - Solid Fuels	CH_4	43.019	6.963	50.00%	50.00%	70.71%	-0.09%	1.69%	0.17%	0.84%	0.12%	0.85%
1.A.4.b Residential - Gaseous Fuels	CH_4	0.417	0.470	50.00%	50.00%	70.71%	-0.01%	0.03%	0.01%	0.01%	0.01%	0.02%
1.A.4.b Residential - Biomass	CH_4	126.063	164.707	50.00%	50.00%	70.71%	-2.05%	8.54%	4.10%	4.27%	2.90%	5.16%
1.A.4.c Agriculture/Forestry/Fisheries - Liquid Fuels	CH_4	4.381	1.139	2.00%	50.00%	50.04%	-0.01%	0.18%	0.03%	0.09%	0.00%	0.09%
1.A.4.c Agriculture/Forestry/Fisheries - Solid Fuels	CH_4	7.008	0.165	2.00%	50.00%	50.04%	0.00%	0.25%	0.00%	0.13%	0.00%	0.13%
1.A.4.c Agriculture/Forestry/Fisheries - Gaseous Fuels	CH_4	1.478	0.082	2.00%	50.00%	50.04%	0.00%	0.05%	0.00%	0.03%	0.00%	0.03%
1.A.4.c Agriculture/Forestry/Fisheries - Biomass Fuels	CH_4	7.686	2.276	2.00%	50.00%	50.04%	-0.02%	0.33%	0.06%	0.16%	0.00%	0.16%
1.A.5.b Mobile - Liquid Fuels	CH_4		0.009	2.00%	50.00%	50.04%	0.00%	0.00%	0.00%	0.00%	0.00%	0.00%
1.B.2.b Natural Gas	CH_4	285.422	89.815	10.00%	30.00%	31.62%	-0.50%	12.28%	2.24%	3.68%	0.32%	3.70%

IPCC GHG Source and Sink Categories (LULUCF is included)		1990 Estimate, Gg CO2-eq	2011 Estimate, Gg CO2-eq	Activity data uncertainty	Emission factor uncertainty	Combined uncertainty	Combined uncertainty as % of total national emissions in year t	Type A sensitivity	Type B sensitivity	Uncertainty in trend in national emissions introduced by emission factor uncertainty	Uncertainty in trend in national emissions introduced by activity data uncertainty	Uncertainty introduced into the trend in total national emissions
1.B.2.d Natural Gas	CH_4	37.800	5.607	10.00%	30.00%	31.62%	-0.03%	1.47%	0.14%	0.44%	0.02%	0.44%
2.C.1 Iron and Steel Production	CH_4	0.058	0.018	25.00%	10.00%	26.93%	0.00%	0.00%	0.00%	0.00%	0.00%	0.00%
4.A. Enteric Fermentation	CH_4	2,148.053	674.119	2.00%	20.00%	20.10%	-2.38%	91.95%	16.78%	18.39%	0.47%	18.40%
4.B.Manure Management	CH_4	273.758	88.780	2.00%	30.00%	30.07%	-0.47%	11.84%	2.21%	3.55%	0.06%	3.55%
5.A.1 Forest Land remaining Forest Land	CH_4	19.371	9.462	14.14%	70.00%	71.41%	-0.12%	0.92%	0.24%	0.64%	0.05%	0.64%
5.C.1 Grassland remaining Grassland	CH_4		0.082	100.00%	70.00%	122.07%	0.00%	0.00%	0.00%	0.00%	0.00%	0.00%
6.A.1 Managed Waste Disposal on Land	CH_4		117.403	20.00%	52.00%	55.71%	-1.15%	2.92%	2.92%	1.52%	0.83%	1.73%
6.A.2. Unmanaged Waste Disposal Sites	CH_4	329.978	321.613	20.00%	52.00%	55.71%	-3.15%	19.61%	8.01%	10.20%	2.26%	10.45%
6.B.1 Industrial Waste Water	CH_4	41.720	10.469	2.00%	30.00%	30.07%	-0.06%	1.73%	0.26%	0.52%	0.01%	0.52%
6.B.2 Domestic and Commercial Waste Water	CH_4	97.860	48.980	10.00%	30.00%	31.62%	-0.27%	4.67%	1.22%	1.40%	0.17%	1.41%
6.D Other	CH_4		1.991	20.00%	100.00%	101.98%	-0.04%	0.05%	0.05%	0.05%	0.01%	0.05%
1.A.1.a Public Electricity and Heat Production - Liquid Fuels	N_2O	7.464	0.114	2.00%	50.00%	50.04%	0.00%	0.27%	0.00%	0.13%	0.00%	0.13%
1.A.1.a Public Electricity and Heat Production - Solid Fuels	N_2O	2.709	0.195	2.00%	50.00%	50.04%	0.00%	0.10%	0.00%	0.05%	0.00%	0.05%
1.A.1.a Public Electricity and Heat Production - Gaseous Fuels	N_2O	1.482	1.074	2.00%	50.00%	50.04%	-0.01%	0.08%	0.03%	0.04%	0.00%	0.04%
1.A.1.a Public Electricity and Heat Production - Biomass Fuels	N_2O	0.541	5.696	20.00%	50.00%	53.85%	-0.05%	0.16%	0.14%	0.08%	0.04%	0.09%
1.A.1.c Manufacture of Solid Fuels and Other Energy Industries - Liquid Fuels	N_2O	0.063	0.047	2.00%	50.00%	50.04%	0.00%	0.00%	0.00%	0.00%	0.00%	0.00%
1.A.1.c Manufacture of Solid Fuels and Other Energy Industries - Solid Fuels	N_2O	1.957		2.00%	50.00%	50.04%		0.07%		0.03%		0.03%
1.A.1.c Manufacture of Solid Fuels and Other Energy Industries - Gaseous Fuels	N_2O	0.025	0.029	2.00%	50.00%	50.04%	0.00%	0.00%	0.00%	0.00%	0.00%	0.00%
1.A.1.c Manufacture of Solid Fuels and Other Energy Industries - Biomass Fuels	N_2O		0.781	15.00%	50.00%	52.20%	-0.01%	0.02%	0.02%	0.01%	0.00%	0.01%
1.A.2.a Iron and Steel - Liquid Fuels	N_2O	0.383		2.00%	50.00%	50.04%		0.01%		0.01%		0.01%
1.A.2.a Iron and Steel - Solid Fuels	N_2O	0.023	0.046	2.00%	50.00%	50.04%	0.00%	0.00%	0.00%	0.00%	0.00%	0.00%
1.A.2.a Iron and Steel - Gaseous Fuels	N_2O	0.131	0.037	2.00%	50.00%	50.04%	0.00%	0.01%	0.00%	0.00%	0.00%	0.00%
1.A.2.b Non-Ferrous Metals - Gaseous Fuels	N_2O		0.005	2.00%	50.00%	50.04%	0.00%	0.00%	0.00%	0.00%	0.00%	0.00%
1.A.2.c Chemicals - Liquid Fuels	N_2O	0.677	0.024	2.00%	50.00%	50.04%	0.00%	0.02%	0.00%	0.01%	0.00%	0.01%
1.A.2.c Chemicals - Gaseous	N_2O	0.013	0.013	2.00%	50.00%	50.04%	0.00%	0.00%	0.00%	0.00%	0.00%	0.00%

IPCC GHG Source and Sink Categories (LULUCF is included)		1990 Estimate, Gg CO2-eq	2011 Estimate, Gg CO2-eq	Activity data uncertainty	Emission factor uncertainty	Combined uncertainty	Combined uncertainty as % of total national emissions in year t	Type A sensitivity	Type B sensitivity	Uncertainty in trend in national emissions introduced by emission factor uncertainty	Uncertainty in trend in national emissions introduced by activity data uncertainty	Uncertainty introduced into the trend in total national emissions
Fuels												
1.A.2.c Chemicals - Biomass Fuels	N_2O		0.210	15.00%	50.00%	52.20%	0.00%	0.01%	0.01%	0.00%	0.00%	0.00%
1.A.2.d. Pulp, Paper and Print - Liquid Fuels	N_2O	0.038		2.00%	50.00%	50.04%		0.00%		0.00%		0.00%
1.A.2.d. Pulp, Paper and Print - Solid Fuels	N_2O	0.012		2.00%	50.00%	50.04%		0.00%		0.00%		0.00%
1.A.2.d. Pulp, Paper and Print - Gaseous Fuels	N_2O	0.084	0.003	2.00%	50.00%	50.04%	0.00%	0.00%	0.00%	0.00%	0.00%	0.00%
1.A.2.d. Pulp, Paper and Print - Biomass Fuels	N_2O		0.133	15.00%	50.00%	52.20%	0.00%	0.00%	0.00%	0.00%	0.00%	0.00%
1.A.2.e Food Processing, Beverages and Tobacco - Liquid Fuels	N_2O	1.962	0.081	2.00%	50.00%	50.04%	0.00%	0.07%	0.00%	0.04%	0.00%	0.04%
1.A.2.e Food Processing, Beverages and Tobacco - Solid Fuels	N_2O	0.464	0.011	2.00%	50.00%	50.04%	0.00%	0.02%	0.00%	0.01%	0.00%	0.01%
1.A.2.e Food Processing, Beverages and Tobacco - Gaseous Fuels	N_2O	0.098	0.058	2.00%	50.00%	50.04%	0.00%	0.00%	0.00%	0.00%	0.00%	0.00%
1.A.2.e Food Processing, Beverages and Tobacco - Biomass Fuels	N_2O	0.283	0.448	15.00%	50.00%	52.20%	0.00%	0.02%	0.01%	0.01%	0.00%	0.01%
1.A.2.f Other - Liquid Fuels	N_2O	2.709	0.361	2.00%	50.00%	50.04%	0.00%	0.10%	0.01%	0.05%	0.00%	0.05%
1.A.2.f Other - Solid Fuels	N_2O	0.195	0.944	2.00%	50.00%	50.04%	-0.01%	0.03%	0.02%	0.02%	0.00%	0.02%
1.A.2.f Other - Gaseous Fuels	N_2O	0.468	0.118	2.00%	50.00%	50.04%	0.00%	0.02%	0.00%	0.01%	0.00%	0.01%
1.A.2.f Other - Biomass Fuels	N_2O	0.482	13.083	15.00%	50.00%	52.20%	-0.12%	0.34%	0.33%	0.17%	0.07%	0.18%
1.A.2.f Other - Other Fuels	N_2O		2.303	2.00%	50.00%	50.04%	-0.02%	0.06%	0.06%	0.03%	0.00%	0.03%
1.A.3.c Civil Aviation - Aviation Gasoline	N_2O	0.000	0.004	2.00%	50.00%	50.04%	0.00%	0.00%	0.00%	0.00%	0.00%	0.00%
1.A.3.c Civil Aviation - Jet Kerosene	N_2O	0.000	0.002	2.00%	50.00%	50.04%	0.00%	0.00%	0.00%	0.00%	0.00%	0.00%
1.A.3.b Road Transportation - Gasoline	N_2O	13.601	5.311	2.00%	50.00%	50.04%	-0.05%	0.61%	0.13%	0.31%	0.00%	0.31%
1.A.3.b Road Transportation - Diesel Oil	N_2O	5.819	14.350	2.00%	50.00%	50.04%	-0.13%	0.56%	0.36%	0.28%	0.01%	0.28%
1.A.3.b Road Transportation - LPG	N_2O	0.170	1.379	2.00%	50.00%	50.04%	-0.01%	0.04%	0.03%	0.02%	0.00%	0.02%
1.A.3.b Road Transportation - Lubricants	N_2O	0.024	0.046	10.00%	50.00%	50.99%	0.00%	0.00%	0.00%	0.00%	0.00%	0.00%
1.A.3.b Road Transportation - Gaseous Fuels	N_2O	0.011		2.00%	50.00%	50.04%		0.00%		0.00%		0.00%
1.A.3.b Road Transportation - Biomass	N_2O		0.720	2.00%	50.00%	50.04%	-0.01%	0.02%	0.02%	0.01%	0.00%	0.01%
1.A.3.c Railways - Liquid Fuels	N_2O	64.964	28.443	2.00%	50.00%	50.04%	-0.25%	3.00%	0.71%	1.50%	0.02%	1.50%
1.A.3.d Naviagtion - Gasoline	N_2O	0.000	0.000	20.00%	50.00%	53.85%	0.00%	0.00%	0.00%	0.00%	0.00%	0.00%

IPCC GHG Source and Sink Categories (LULUCF is included)		1990 Estimate, Gg CO2-eq	2011 Estimate, Gg CO2-eq	Activity data uncertainty	Emission factor uncertainty	Combined uncertainty	Combined uncertainty as % of total national emissions in year t	Type A sensitivity	Type B sensitivity	Uncertainty in trend in national emissions introduced by emission factor uncertainty	Uncertainty in trend in national emissions introduced by activity data uncertainty	Uncertainty introduced into the trend in total national emissions
1.A.3.d Naviagtion - Diesel Oil	N_2O	0.105	1.962	2.00%	50.00%	50.04%	-0.02%	0.05%	0.05%	0.03%	0.00%	0.03%
1.A.3.e. Railway (Biofuels for 1A3C)	N_2O		0.039	2.00%	50.00%	50.04%	0.00%	0.00%	0.00%	0.00%	0.00%	0.00%
1.A.4.a Commercial/Institutional - Liquid Fuels	N_2O	2.823	0.288	2.00%	50.00%	50.04%	0.00%	0.11%	0.01%	0.05%	0.00%	0.05%
1.A.4.a Commercial/Institutional - Solid Fuels	N_2O	7.306	0.502	2.00%	50.00%	50.04%	0.00%	0.27%	0.01%	0.13%	0.00%	0.13%
1.A.4.a Commercial/Institutional - Gaseous Fuels	N_2O	0.189	0.154	2.00%	50.00%	50.04%	0.00%	0.01%	0.00%	0.01%	0.00%	0.01%
1.A.4.a Commercial/Institutional - Biomass	N_2O	6.470	5.031	20.00%	50.00%	53.85%	-0.05%	0.35%	0.13%	0.18%	0.04%	0.18%
1.A.4.b Residential - Liquid Fuels	N_2O	0.913	0.531	50.00%	50.00%	70.71%	-0.01%	0.05%	0.01%	0.02%	0.01%	0.02%
1.A.4.b Residential - Solid Fuels	N_2O	3.306	0.504	50.00%	50.00%	70.71%	-0.01%	0.13%	0.01%	0.06%	0.01%	0.07%
1.A.4.b Residential - Gaseous Fuels	N_2O	0.123	0.139	50.00%	50.00%	70.71%	0.00%	0.01%	0.00%	0.00%	0.00%	0.00%
1.A.4.b Residential - Biomass	N_2O	24.812	34.204	50.00%	50.00%	70.71%	-0.43%	1.73%	0.85%	0.86%	0.60%	1.05%
1.A.4.c Agriculture/Forestry/Fisheries - Liquid Fuels	N_2O	2.468	0.923	2.00%	50.00%	50.04%	-0.01%	0.11%	0.02%	0.05%	0.00%	0.05%
1.A.4.c Agriculture/Forestry/Fisheries - Solid Fuels	N_2O	0.508	0.011	2.00%	50.00%	50.04%	0.00%	0.02%	0.00%	0.01%	0.00%	0.01%
1.A.4.c Agriculture/Forestry/Fisheries - Gaseous Fuels	N_2O	0.436	0.024	2.00%	50.00%	50.04%	0.00%	0.02%	0.00%	0.01%	0.00%	0.01%
1.A.4.c Agriculture/Forestry/Fisheries - Biomass Fuels	N_2O	1.513	0.451	2.00%	50.00%	50.04%	0.00%	0.06%	0.01%	0.03%	0.00%	0.03%
1.A.5.b Mobile - Liquid Fuels	N_2O		0.026	2.00%	50.00%	50.04%	0.00%	0.00%	0.00%	0.00%	0.00%	0.00%
3.D Other	N_2O		4.960	2.00%	2.00%	2.83%	0.00%	0.12%	0.12%	0.00%	0.00%	0.00%
4.B.Manure Management	N_2O	569.677	122.135	40.00%	30.00%	50.00%	-1.07%	23.07%	3.04%	6.92%	1.72%	7.13%
4.D.1. Direct Soil Emissions	N_2O	1,618.317	954.865	40.00%	25.00%	47.17%	-7.92%	80.45%	23.77%	20.11%	13.45%	24.19%
4.D.2 Pasture, Range and Paddock Manure	N_2O	358.351	86.977	40.00%	25.00%	47.17%	-0.72%	14.77%	2.17%	3.69%	1.22%	3.89%
4.D.3.Indirect Emissions	N_2O	1,033.873	388.649	30.00%	40.00%	50.00%	-3.42%	45.97%	9.67%	18.39%	4.10%	18.84%
5.A.1 Forest Land remaining Forest Land	N_2O	146.369	144.336	14.14%	70.00%	71.41%	-1.81%	8.75%	3.59%	6.12%	0.72%	6.16%
5.B.2 Land converted to Cropland	N_2O	1.364	12.739	35.00%	90.00%	96.57%	-0.22%	0.37%	0.32%	0.33%	0.16%	0.36%
5.C.1 Grassland remaining Grassland	N_2O		2.408	100.00%	70.00%	122.07%	-0.05%	0.06%	0.06%	0.04%	0.08%	0.09%
5.D.2 Land converted to Wetlands	N_2O	1.315	1.315	90.00%	95.00%	130.86%	-0.03%	0.08%	0.03%	0.08%	0.04%	0.09%
6.B.1 Industrial Waste Water	N_2O	2.436	0.224	10.00%	30.00%	31.62%	0.00%	0.09%	0.01%	0.03%	0.00%	0.03%
6.B.2 Domestic and Commercial Waste Water	N_2O	63.528	49.400	10.00%	30.00%	31.62%	-0.27%	3.47%	1.23%	1.04%	0.17%	1.05%
6.C Waste Incineration	N_2O		0.012	20.00%	90.00%	92.20%	0.00%	0.00%	0.00%	0.00%	0.00%	0.00%

IPCC GHG Source and Sink Categories (LULUCF is included)		1990 Estimate, Gg CO2-eq	2011 Estimate, Gg CO2-eq	Activity data uncertainty	Emission factor uncertainty	Combined uncertainty	Combined uncertainty as % of total national emissions in year t	Type A sensitivity	Type B sensitivity	Uncertainty in trend in national emissions introduced by emission factor uncertainty	Uncertainty in trend in national emissions introduced by activity data uncertainty	Uncertainty introduced into the trend in total national emissions
6.D Other	N_2O		2.204	20.00%	90.00%	92.20%	-0.04%	0.05%	0.05%	0.05%	0.02%	0.05%
TOTAL	**CO_2 eq**	**4,017.36**	**-5,685.01**	**25.65**	**83.69**	**92.92**	**0.52**	**-0.77**	**-1.42**	**-2.01**	**-0.09**	**6.40**
CONTROL				Percentage uncertainty in total inventory			**72.00%**				Trend uncertainty	**253.04%**
		Input Data	Input Data	$\sqrt{E^2+F^2}$	$\frac{G \bullet D}{\sum D}$	Note B	$\frac{D}{\sum C}$	$I \bullet F$ Note C	$J \bullet E \bullet \sqrt{2}$ Note D	$\sqrt{K^2+L^2}$	Note E	Note E

ANNEX 8: OTHER

Additional information on CSB **Integrated Statistical Data Management System (ISDMS)**

ISDMS contents:

Following business application software modules are covering and supporting all phases of the statistical data processing:

Core metadata base module – the key part of the system ensures metadata collection and storage, defines all entire system processes starting from data collection and ending with output reports preparation. All System software modules are linked with the Core Metadata module.

Registers module – ensure system users with the full range of respondents data.

Data entry and validation module – generates date entry and validation applications, executes validation and data editing processes and storage clean data sets in the Micro Data Base.

Web based data collection module – ensures electronic data collection via Web.

Data aggregation module – ensures data aggregation on different conditions and storage of the aggregated data sets in the Macro Data Base.

Data analysis module – via micro data export to MS Excel and/or Access ensures data analysis processes, MS OLAP tools are available for data analysis as well.

Data dissemination module – ensures data storage for publication at CSB web.

User's administration module – administrates user roles and rights.

ISDMS advantages:

1. Standardized data entry, processing and storage procedures => process oriented data processing.
2. Centralized processing and storage of all types of statistical data, including metadata, by using data warehouse technologies and OLAP tools.
3. The system is connected to Business Register => direct respondent basic data retrieval and updating.
4. Special import and export procedure is created for data exchange with other systems.
5. A link with PC Axis is created for electronic data dissemination.